university of groningen / groningen bioinformatics centre

From cell biology to Petri nets

Rainer Breitling, Groningen, NL
David Gilbert, London, UK
Monika Heiner, Cottbus, DE

Biology = Concentrations

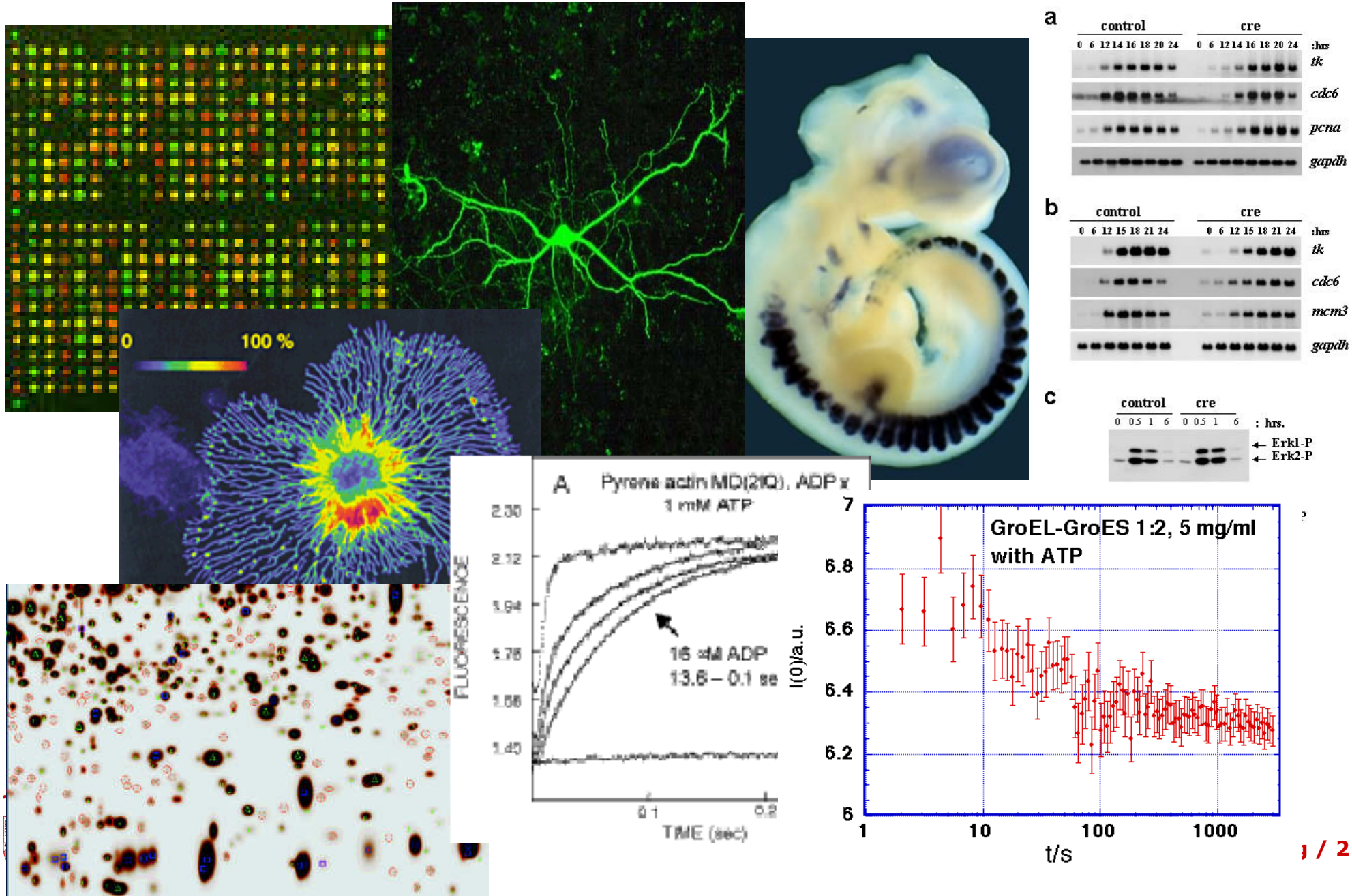

The simplest chemical reaction

$$A \rightarrow B$$

- irreversible, one-molecule reaction
- examples: all sorts of decay processes, e.g. radioactive, fluorescence, activated receptor returning to inactive state
- any metabolic pathway can be described by a combination of processes of this type (including reversible reactions and, in some respects, multi-molecule reactions)

The simplest chemical reaction

$$A \rightarrow B$$

various levels of description:

- homogeneous system, large numbers of molecules = ordinary differential equations, **kinetics**
- small numbers of molecules = probabilistic equations, **stochastics**
- spatial heterogeneity = partial differential equations, **diffusion**
- small number of heterogeneously distributed molecules = single-molecule tracking (e.g. cytoskeleton modelling)

Kinetics Description

Main idea: Molecules don't talk

- Imagine a box containing N molecules.
  How many will decay during time t? **k*N**
- Imagine two boxes containing N/2 molecules each.
  How many decay? **k*N**
- Imagine two boxes containing N molecules each.
  How many decay? **2k*N**
- In general:

$$-\frac{dn(t)}{dt} = \lambda * n(t) \quad \Leftrightarrow \quad n(t) = N_0 e^{-\lambda t}$$

differential equation (ordinary, linear, first-order)

exact solution (in more complex cases replaced by a numerical approximation)

Kinetics Description

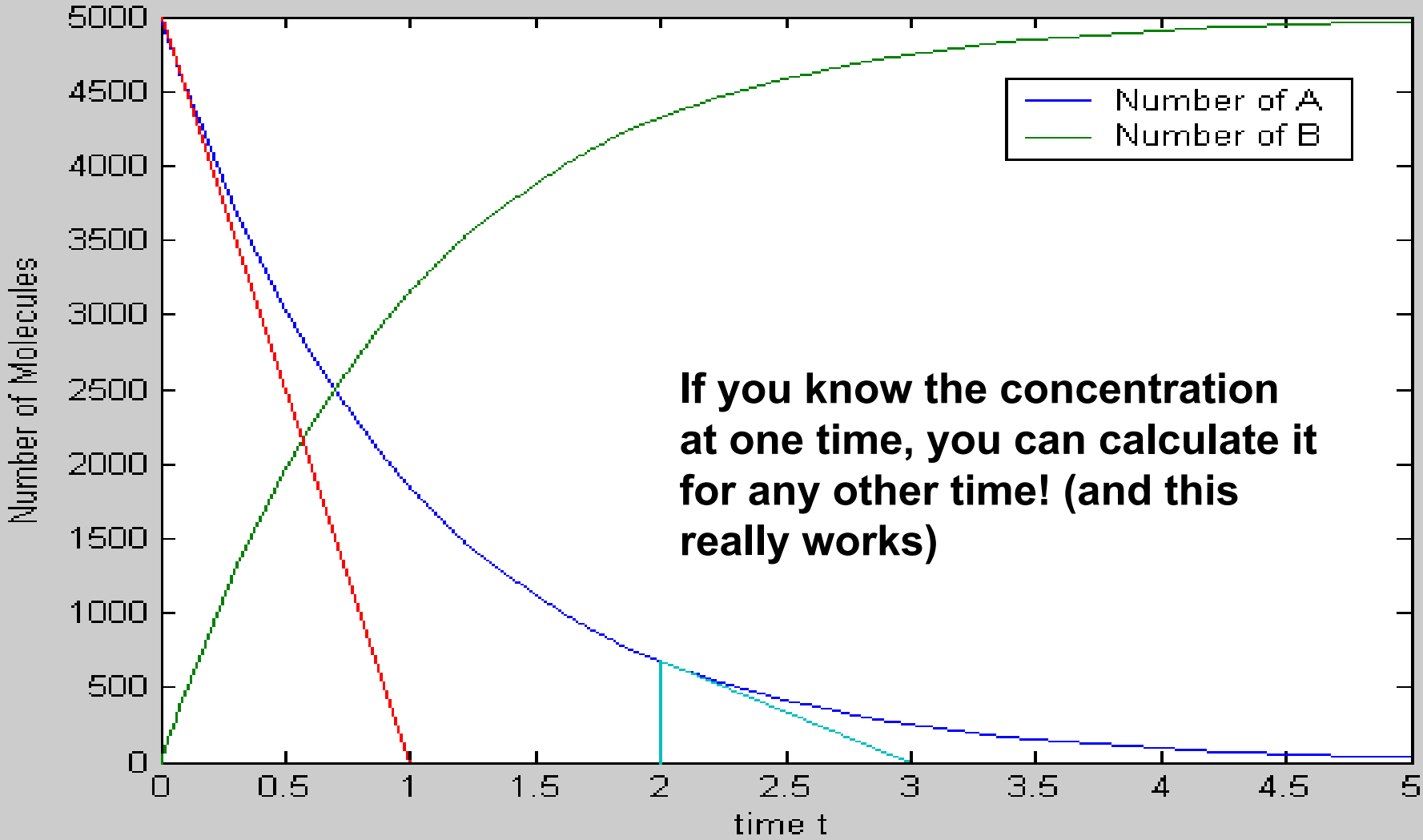

If you know the concentration at one time, you can calculate it for any other time! (and this really works)

Probabilistic Description

Main idea: Molecules are isolated entities without memory

Probability of decay of a single molecule in some small time interval:

$$p_1 = \lambda \Delta t$$

Probability of survival in Δt:

$$p_2 = 1 - p_1 = 1 - \lambda \Delta t$$

Probability of survival for some time t:

$$p = \lim_{x \to \infty} (1 - \lambda \frac{t}{x})^x = e^{-\lambda t}$$

Transition to large number of molecules:

$$n(t) = N_0 e^{-\lambda t}$$ or

$$\frac{dn(t)}{dt} = -\lambda N_0 e^{-\lambda t} = -\lambda n(t)$$

Probabilistic Description – 2

Probability of survival of a single molecule for some time t:

$$p = \lim_{x \to \infty} (1 - \lambda \frac{t}{x})^x = e^{-\lambda t}$$

Probability that exactly x molecules survive for some time t:

$$p_x = (e^{-\lambda t})^x (1 - e^{-\lambda t})^{N_0 - x} \binom{N_0}{x}$$

Most likely number to survive to time t:

$$\max(x \mid p_x) = N_0 e^{-\lambda t}$$

Probabilistic Description – 3

Markov Model (pure death!)

Decay rate: $\Lambda(n,t) = n\lambda$

Probability of decay: $p = \Lambda(n,t)dt$

Probability distribution of n surviving molecules at time t: $P(n,t)$

Description:

Time: `t -> wait dt -> t+dt`

Molecules:

`n -> no decay -> n`

`n+1 -> one decay -> n`

$$P(n,t+dt) = P(n+1,t)\Lambda(n+1,t)dt + P(n,t)[1-\Lambda(n,t)dt]$$

Final Result (after some calculating): The same as in the previous probabilistic description

Petri Net representation

?

Some (Bio)Chemical Conventions

Concentration of Molecule A = [A], usually in units mol/litre (molar)

Rate constant = k, with indices indicating constants for various reactions (k_1, k_2...)

Therefore:

$$A \rightarrow B$$

$$\frac{d[A]}{dt} = -\frac{d[B]}{dt} = -k_1[A]$$

Reversible, Single-Molecule Reaction

A ←→ B, or A → B || B → A, or 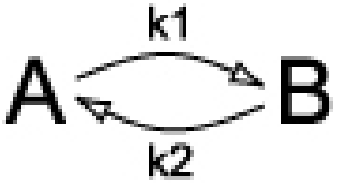

Differential equations:

$$\frac{d[A]}{dt} = -\overset{\text{forward}}{k_1[A]} + \overset{\text{reverse}}{k_2[B]}$$

$$\frac{d[B]}{dt} = k_1[A] - k_2[B]$$

Main principle: Partial reactions are **independent**!

Reversible, single-molecule reaction – 2

Differential Equation:

$$\frac{d[A]}{dt} = -k_1[A] + k_2[B]$$

$$\frac{d[B]}{dt} = k_1[A] - k_2[B]$$

Equilibrium (=steady-state):

$$\frac{d[A]_{equi}}{dt} = \frac{d[B]_{equi}}{dt} = 0$$

$$-k_1[A]_{equi} + k_2[B]_{equi} = 0$$

$$\frac{[A]_{equi}}{[B]_{equi}} = \frac{k_2}{k_1} = K_{equi}$$

Irreversible, two-molecule reaction

The last piece of the puzzle

A+B→C

Differential equations:

$$\frac{d[A]}{dt} = \frac{d[B]}{dt} = -\frac{d[C]}{dt}$$

$$\frac{d[A]}{dt} = -k[A][B]$$

Non-linear!

Underlying idea: Reaction probability = Combined probability that both [A] and [B] are in a "reactive mood":

$$p(AB) = p(A)p(B) = k_1^*[A]k_2^*[B] = k[A][B]$$

A simple metabolic pathway

A→B←→C+D

Differential equations:

d/dt	decay	forward	reverse
[A]=	**-k1 [A]**		
[B]=	**+k1 [A]**	**-k2 [B]**	**+k3 [C] [D]**
[C]=		**+k2 [B]**	**-k3 [C] [D]**
[D]=		**+k2 [B]**	**-k3 [C] [D]**

Metabolic Networks as Bigraphs

A→B←→C+D

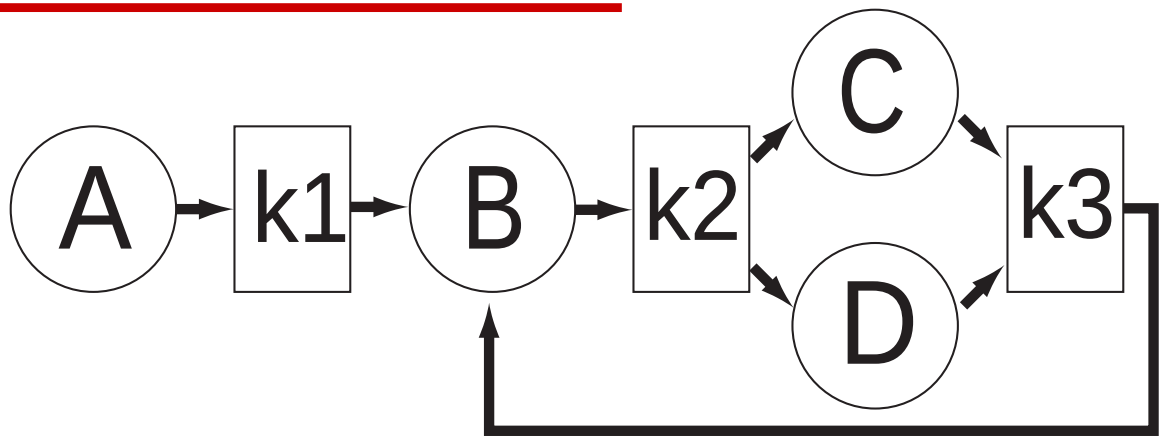

	k1	k2	k3
A	-1	0	0
B	1	-1	1
C	0	1	-1
D	0	1	-1

d/dt	decay	forward	reverse
[A]	-k1[A]		
[B]	+k1[A]	-k2[B]	+k3[C][D]
[C]		+k2[B]	-k3[C][D]
[D]		+k2[B]	-k3[C][D]

Petri nets

- atomic actions -> transitions -> chemical reactions

$$2\ NAD^+ + 2\ H_2O \rightarrow 2\ NADH + 2\ H^+ + O_2$$

input compounds

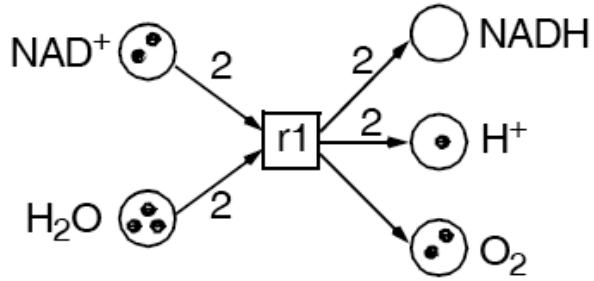

output compounds

- local conditions -> places -> chemical compounds
- multiplicities -> arc weights -> stoichiometric relations
- condition's state -> token(s) -> available amount (e.g. mol)
- system state -> marking -> compounds distribution
- $PN = (P, T, F, m_0)$, $F: (P \times T) \cup (T \times P) \rightarrow N_0$, $m_0: P \rightarrow N_0$

Petri nets

http://www-dssz.informatik.tu-cottbus.de/web_animation/pn_demos_flat-nets.html

- atomic actions -> transitions -> chemical reactions

$$2\ NAD^+ + 2\ H_2O \rightarrow 2\ NADH + 2\ H^+ + O_2$$

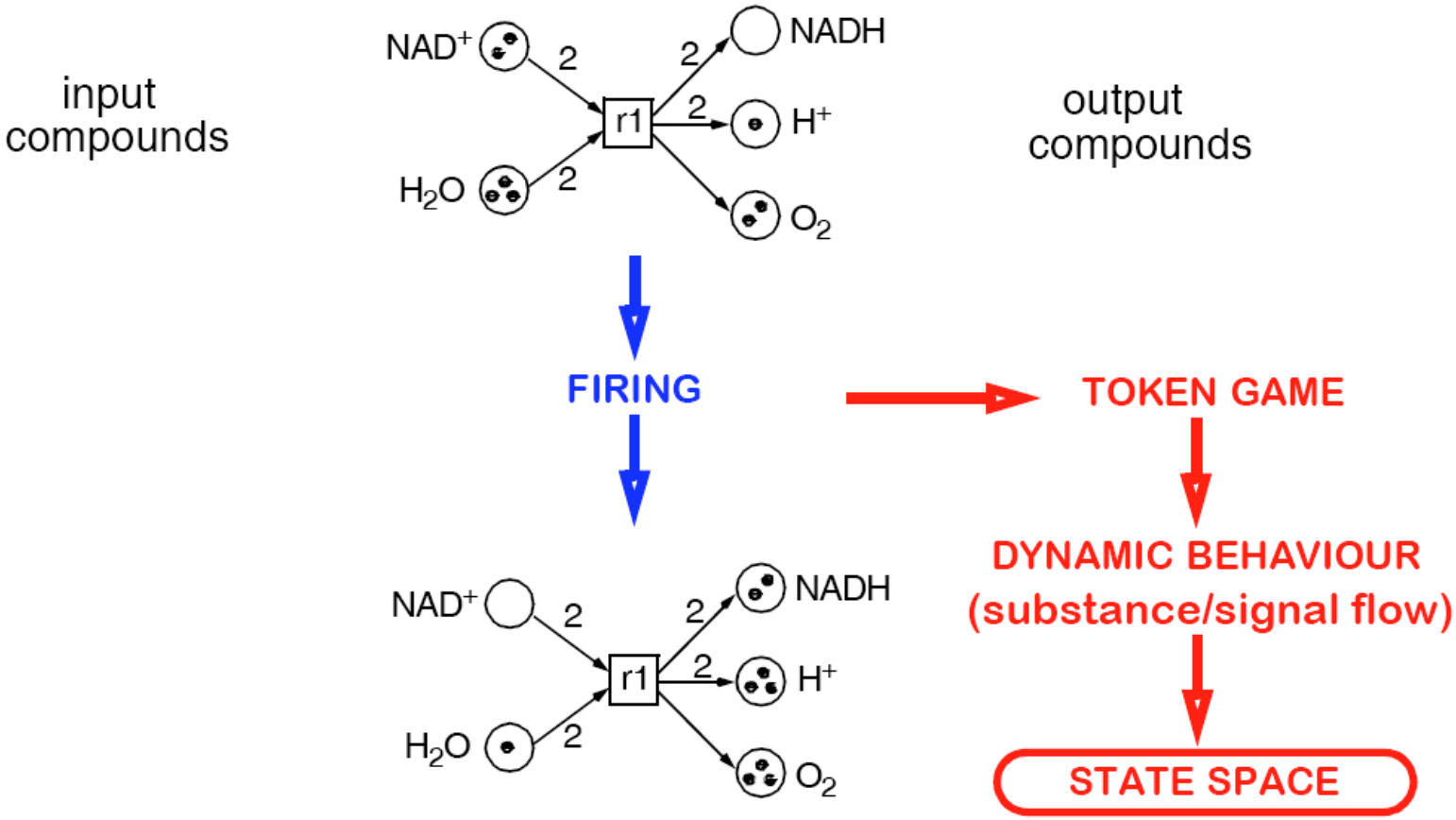

Qualitative Petri-Net
Modelling & Analysis

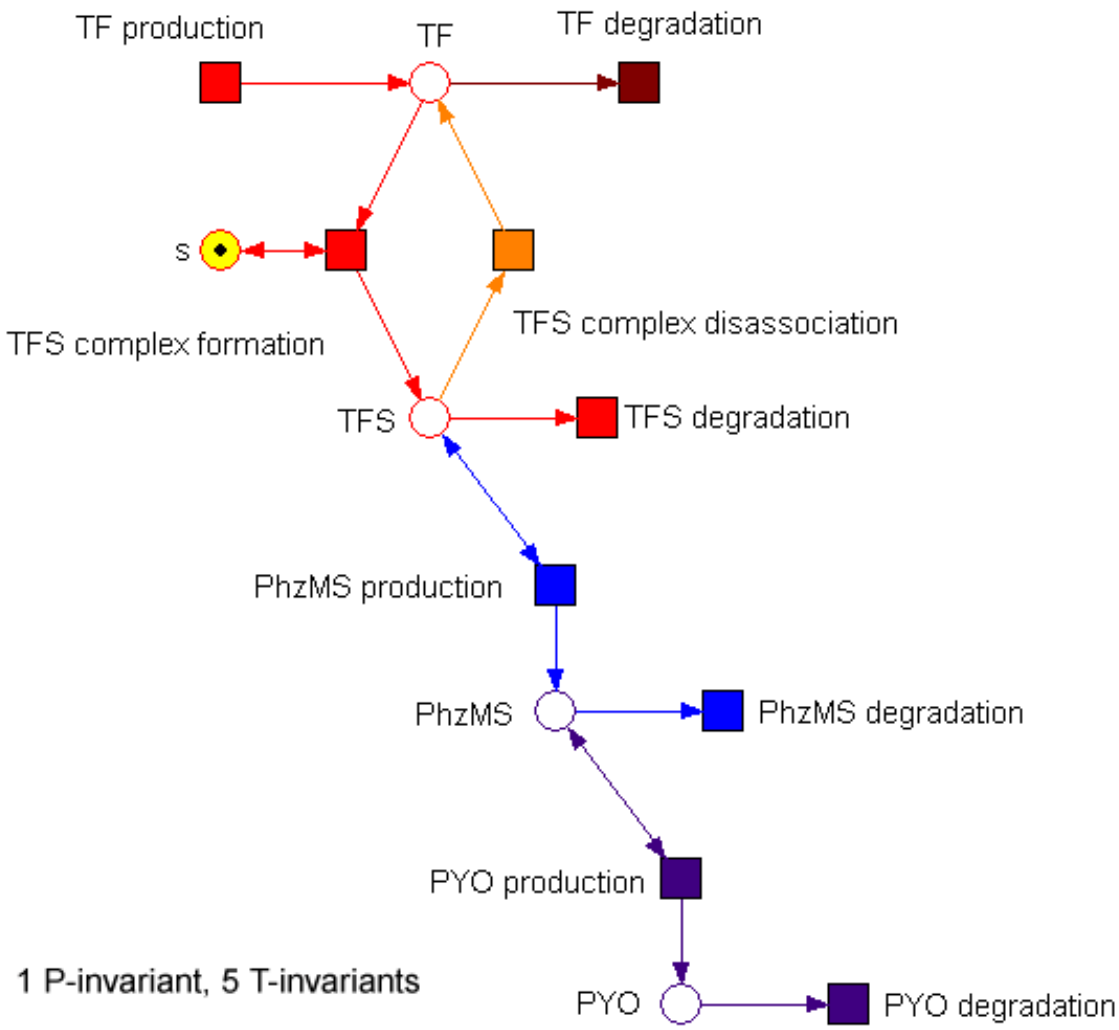

1 P-invariant, 5 T-invariants

Graphical representation - Snoopy

Qualitative analysis Charlie

- Unbounded, live & reversible
- Covered by T invariants
- P invariants

Biological description → bigraph → differential equations

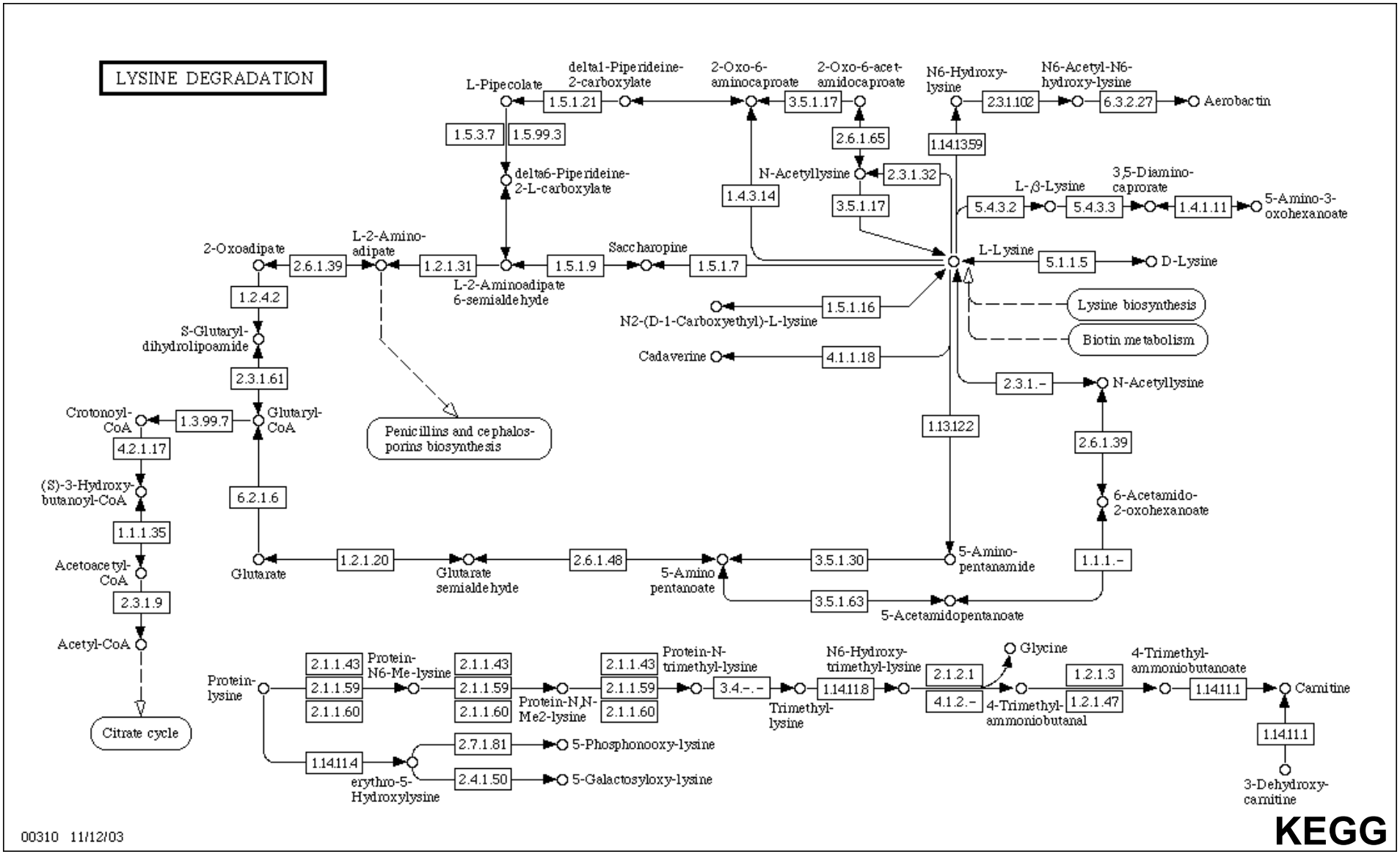

Biological description → bigraph → ODEs

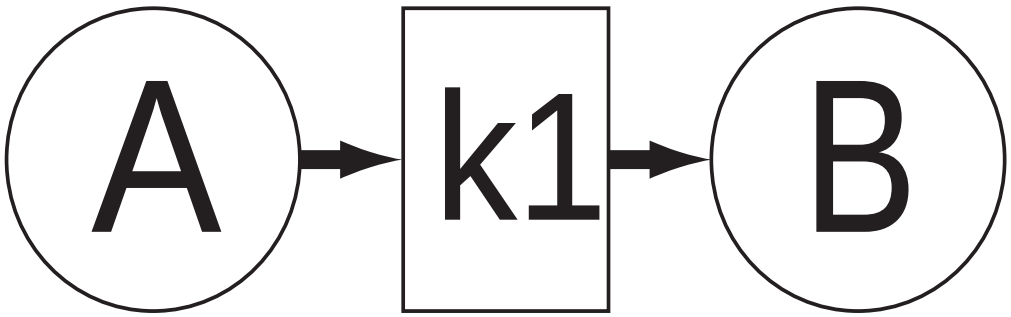

Biological description → bigraph → ODEs

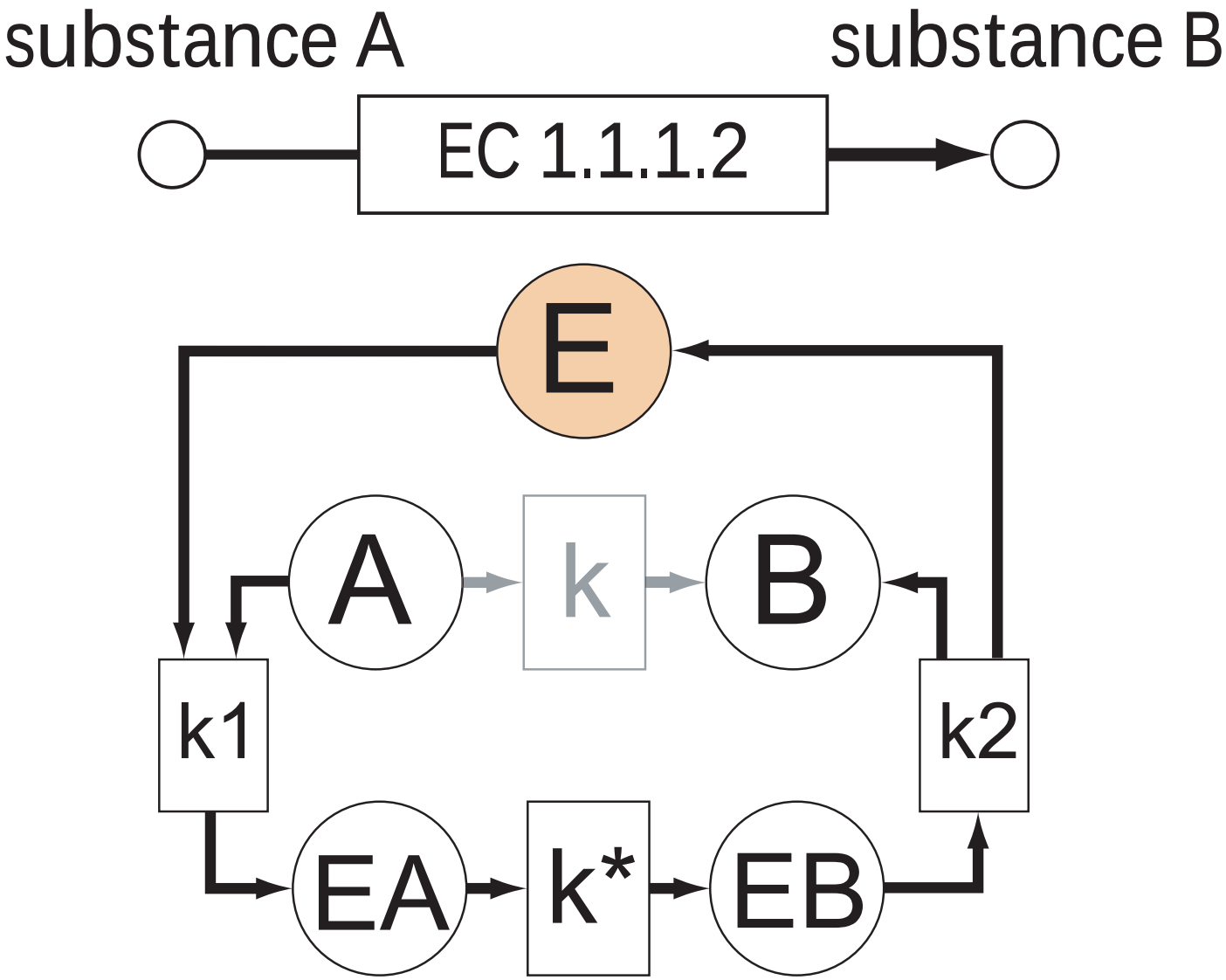

A special case: enzyme reactions

$$E + S \underset{k_{-1}}{\overset{k_1}{\rightleftharpoons}} ES \xrightarrow{k_2} E + P$$

In a **quasi steady state**, we can assume that [ES] is constant. Then:

$$[ES] = \frac{k_1[E][S]}{k_{-1} + k_2}$$

If we now define a new constant $\mathbf{K_m}$ (Michaelis constant), we get:

$$[ES] = \frac{[E][S]}{K_m} \qquad K_m = \frac{k_{-1} + k_2}{k_1}$$

A special case: enzyme reactions

Substituting [E] (free enzyme) by the total enzyme concentration we get:

$$[ES] = \frac{([E_0] - [ES])[S]}{K_m}$$

$$[ES] = [E_0]\frac{1}{1 + \frac{K_m}{[S]}}$$

Hence, the **reaction rate** is:

$$V = \frac{d[P]}{dt} = k_2[ES]$$

$$\frac{d[P]}{dt} = k_2[E_0]\frac{[S]}{K_m + [S]} = V_{max}\frac{[S]}{K_m + [S]}$$

A special case: enzyme reactions

Underlying assumptions of the Michaelis-Menten approximation:

- Free diffusion, random collisions of infinite number of molecules
- Irreversible reactions
- Quasi steady state

In **cell signaling pathways**, all three assumptions will be frequently violated:

- Reactions of rather rare molecules happen at membranes and on scaffold structures
- Reactions happen close to equilibrium and both reactions have non-zero fluxes
- Enzymes are themselves substrates for other enzymes, concentrations change rapidly, $d[ES]/dt \approx d[P]/dt$

Cell signaling pathways

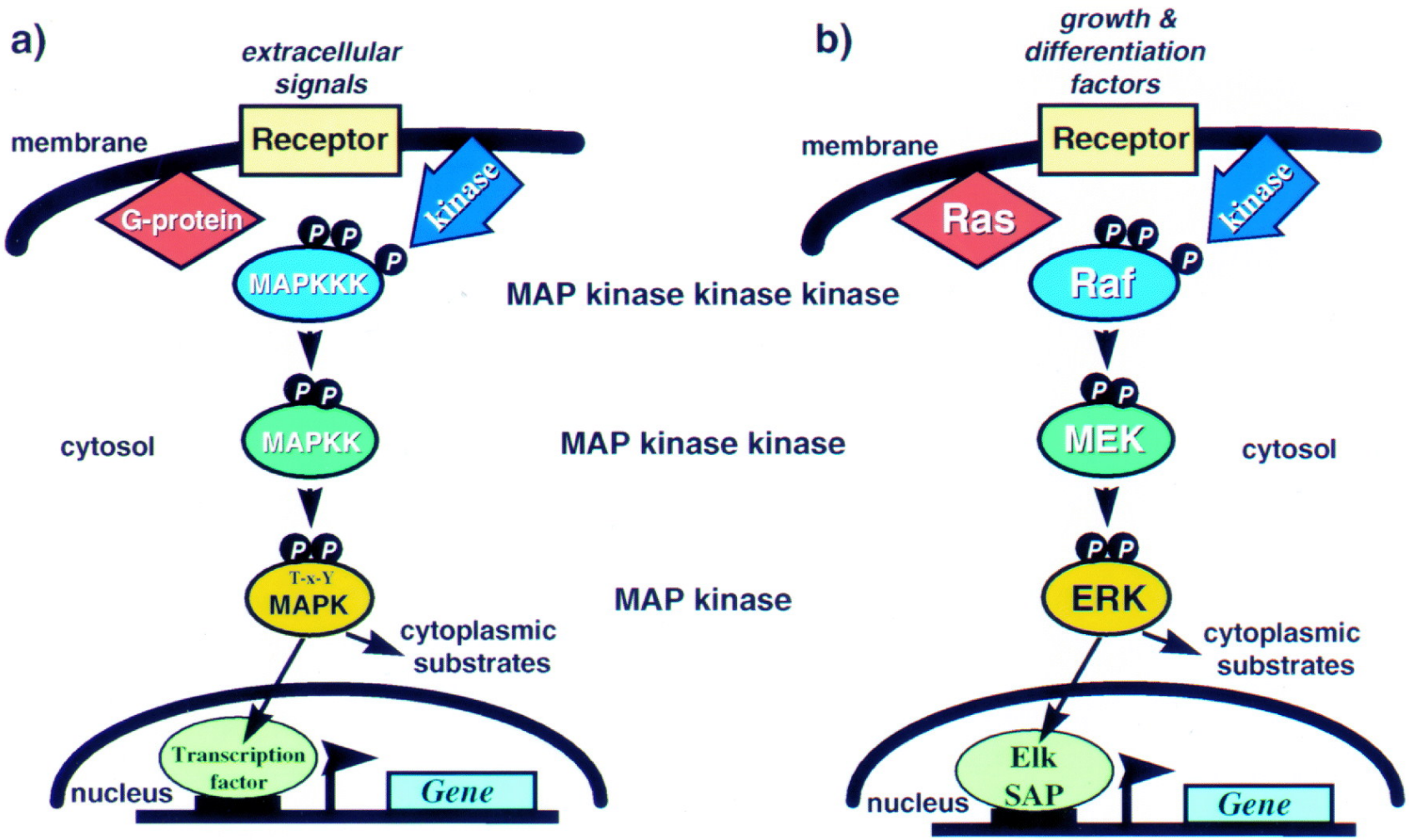

Fig. courtesy of W. Kolch

Metabolic pathways vs. Signaling Pathways

(can you give the mass-action equations?)

Metabolic

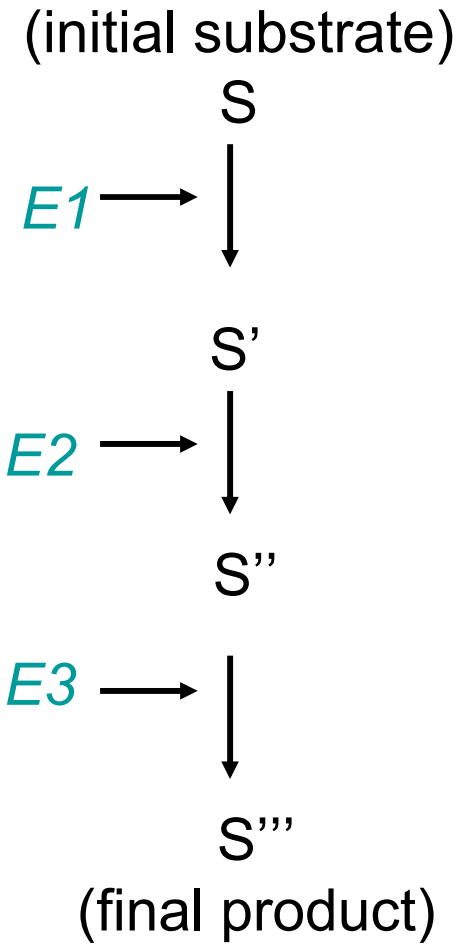

Classical enzyme-product pathway

Signaling cascade

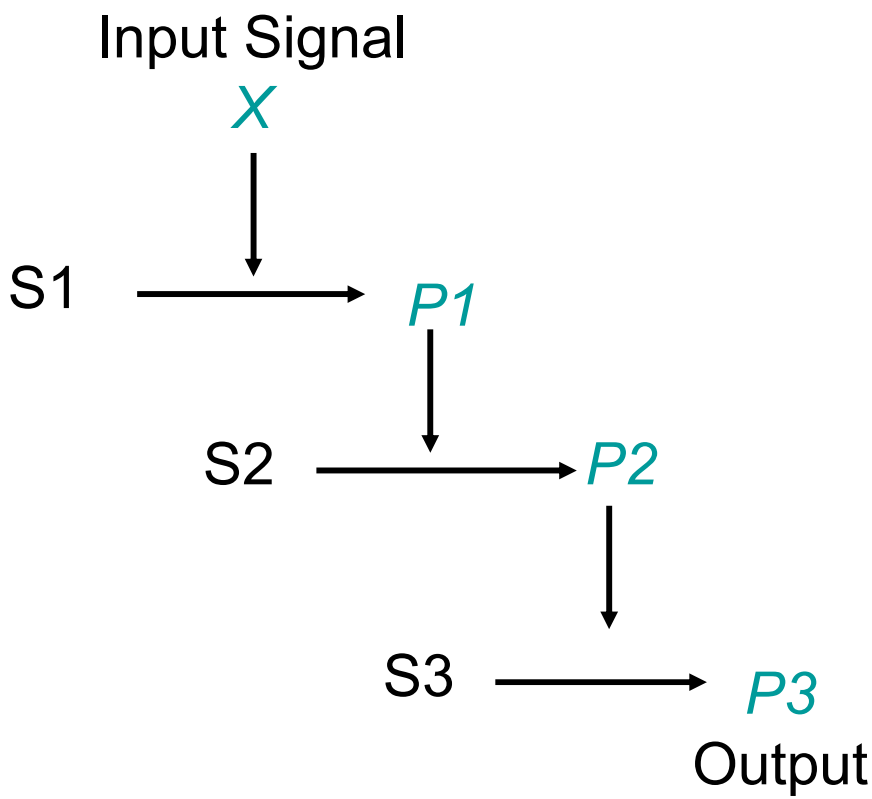

Product become enzyme at next stage

Metabolic pathways vs. Signalling Pathways

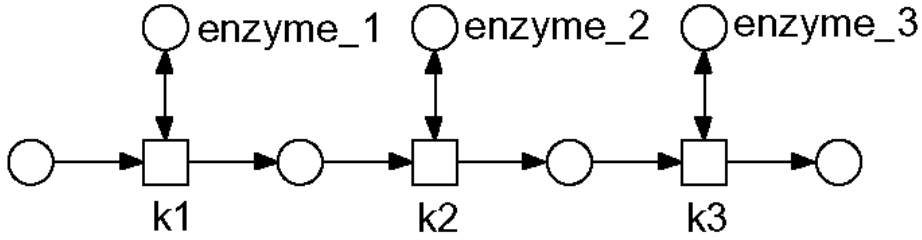

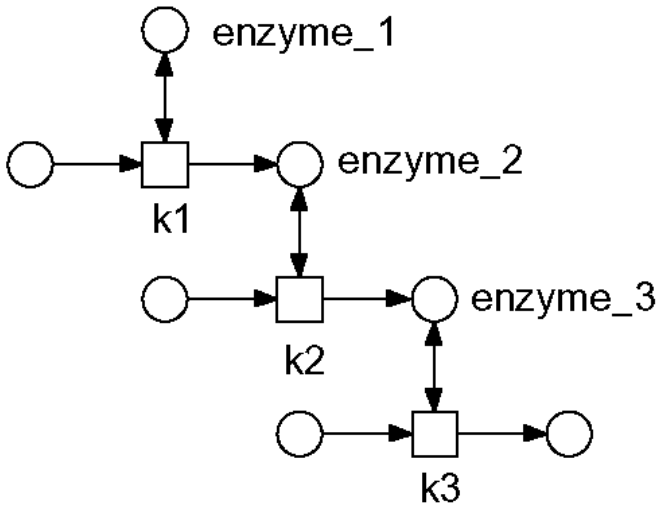

Cell signaling pathways

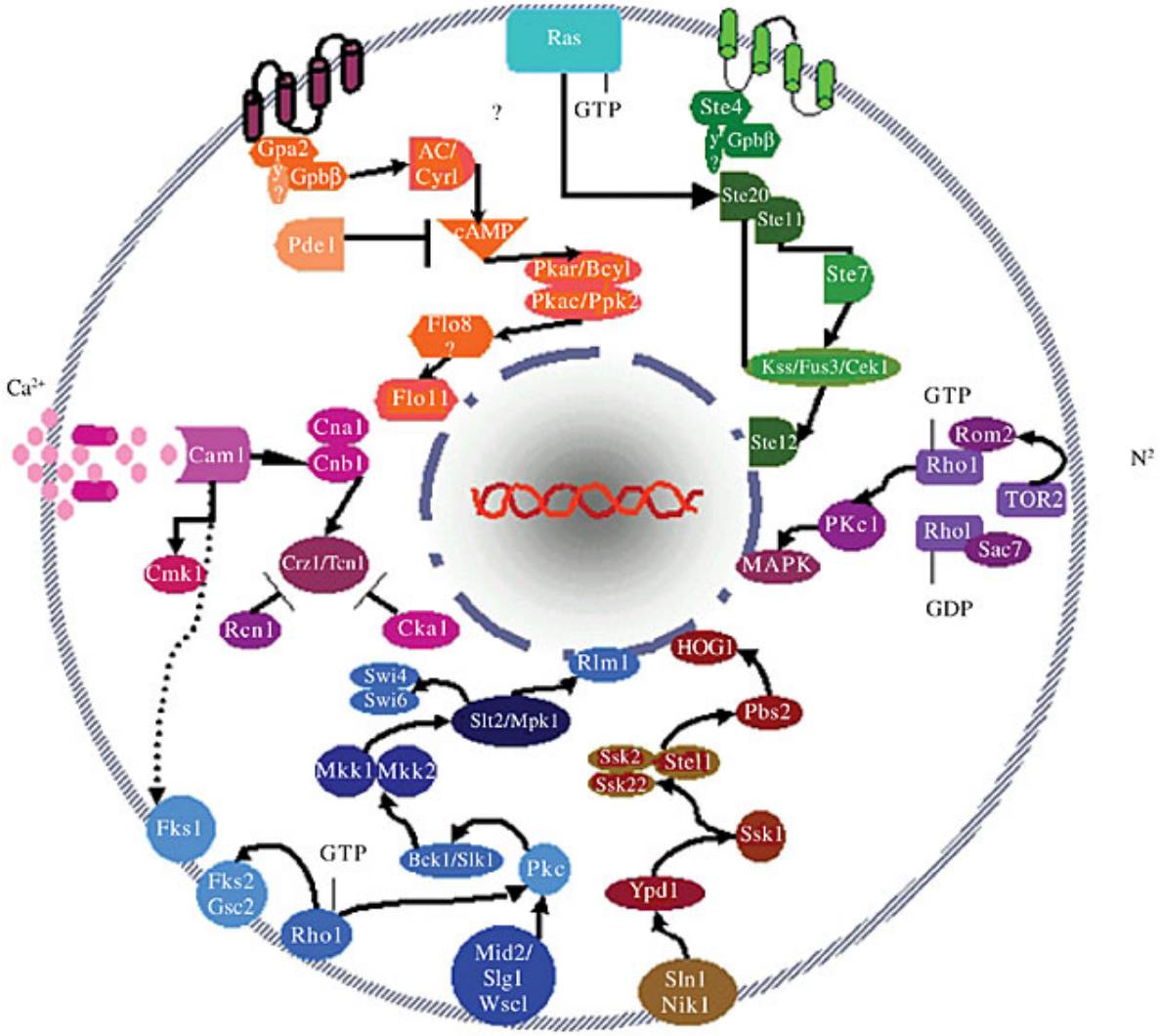

Figure 1. Signal transduction pathways in *Paracoccidioides brasiliensis*. Cell adhesion (orange), pheromone response (green), calcium/calmodulin (pink), cell integrity (blue), high osmotic growth stress response (brown), and TOR (purple) pathways are depicted.

Cell signaling pathways

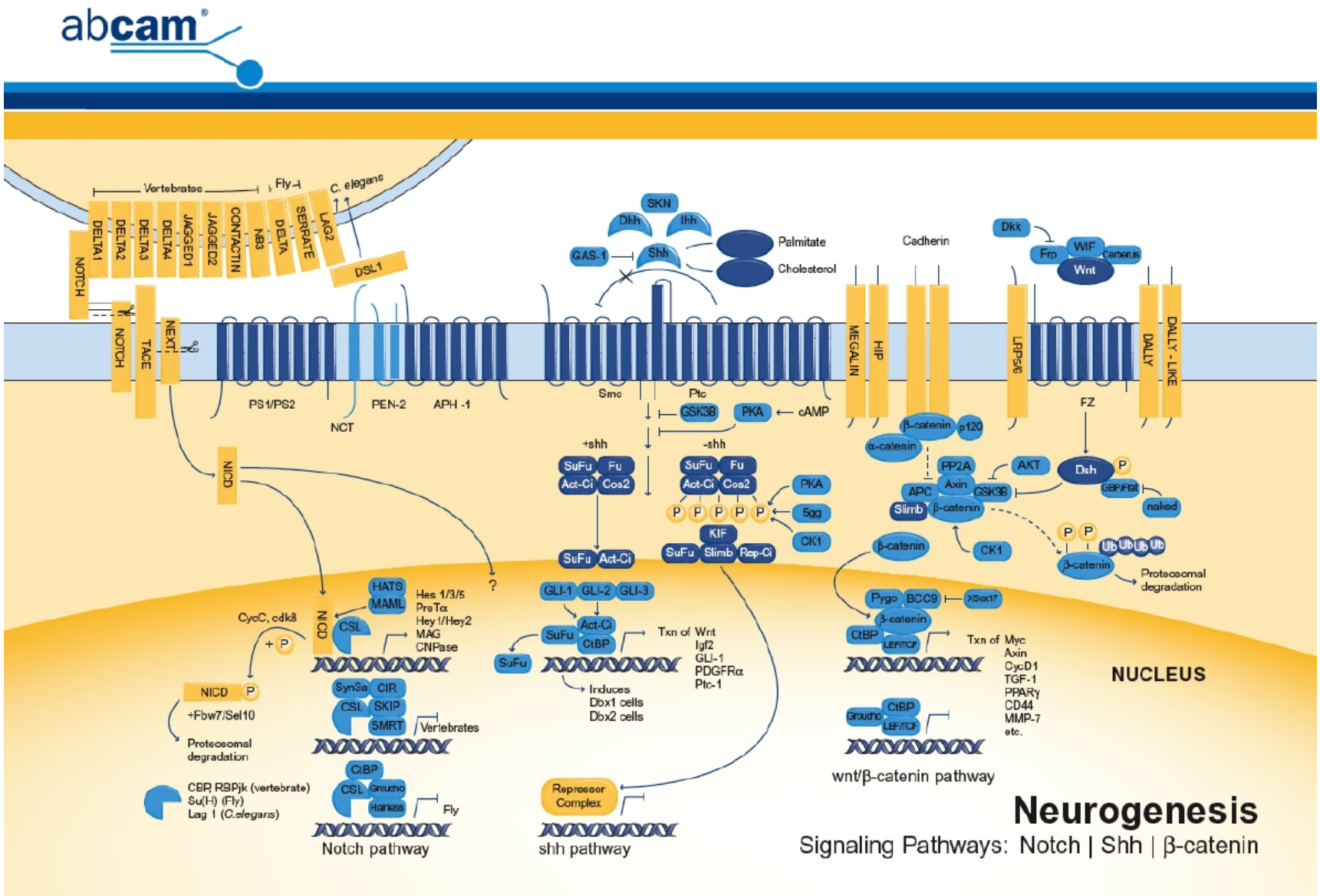

Cell signaling pathways

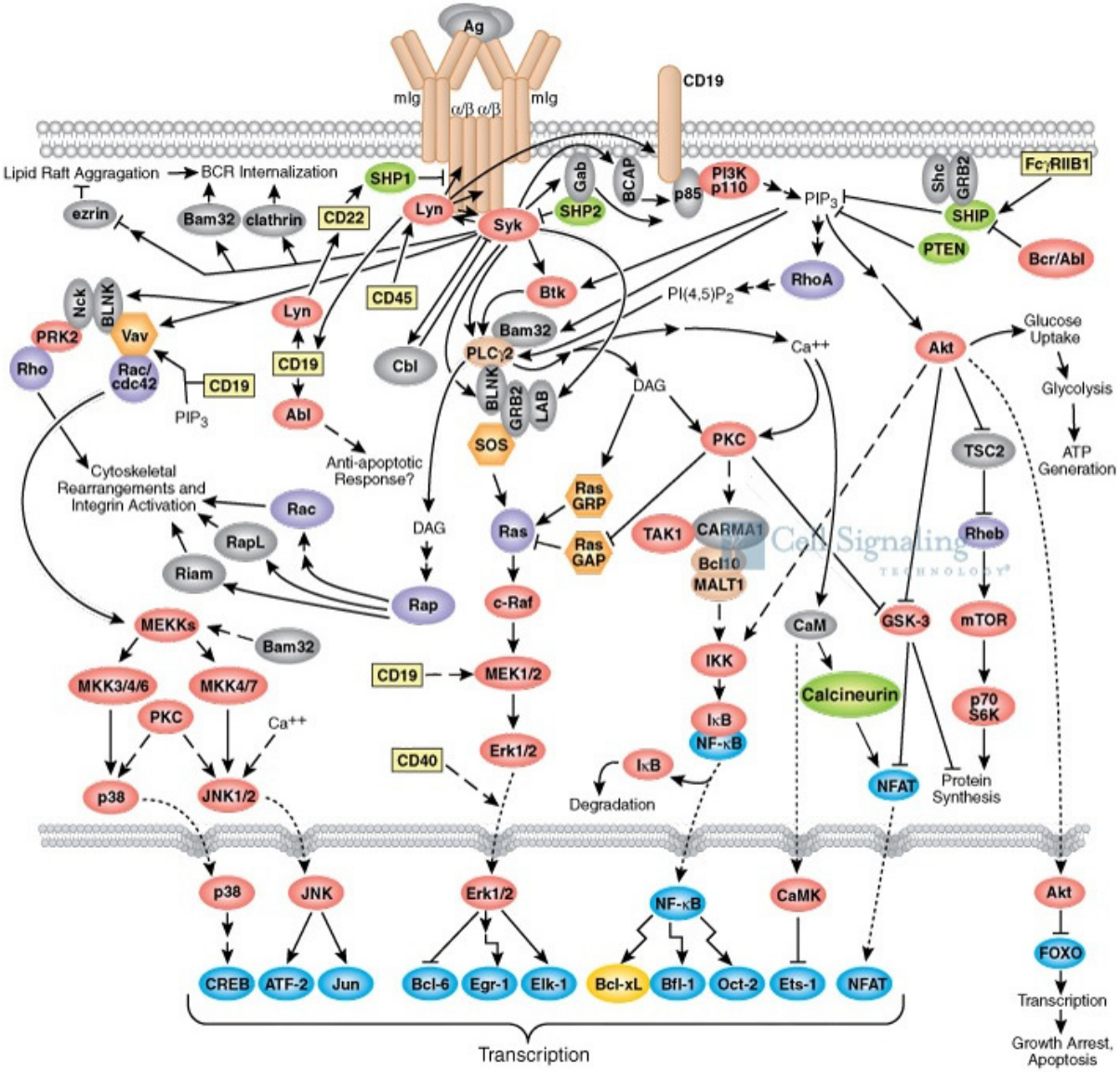

Cell signaling pathways

- Common components:
  - Receptors binding to ligands
    - R(inactive) + L → RL(active)
  - Proteins forming complexes
    - P1 + P2 → P1P2-complex
  - Proteins acting as enzymes on other proteins (e.g., phosphorylation by kinases)
    - P1 + K → P1* + K

MA1: Mass action for enzymatic reaction

$$E + A \underset{k_2}{\overset{k_1}{\rightleftharpoons}} E \mid A \xrightarrow{k_3} E + B$$

- A: substrate
- B: product
- E: enzyme
- E|A substrate-enzyme complex

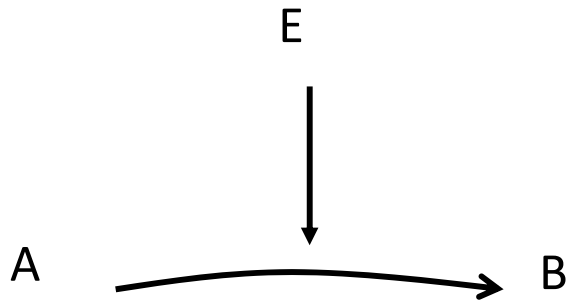

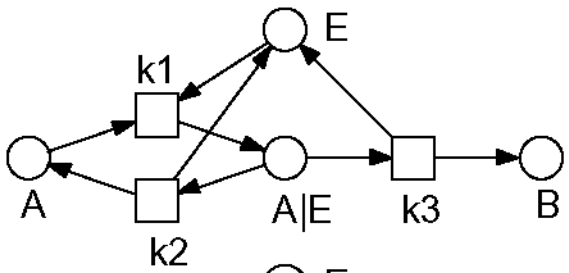

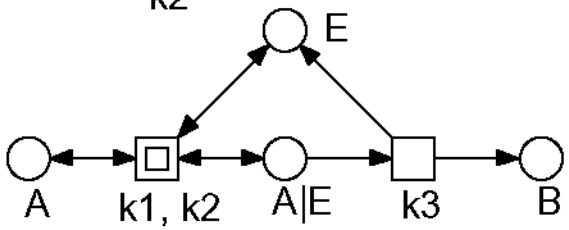

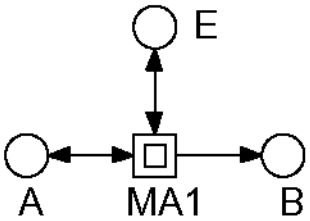

MA2 model

$$A+E \underset{k_2}{\overset{k_1}{\rightleftarrows}} A|E \xrightarrow{k'_3} B|E \underset{k'_2}{\overset{k'_1}{\rightleftarrows}} B+E$$

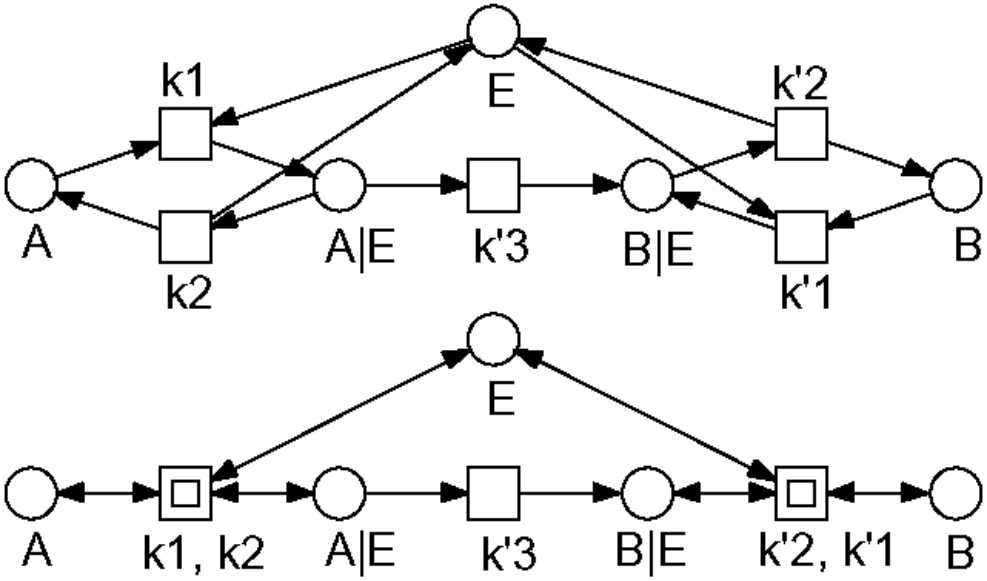

MA3 model

$$A+E \underset{k_2}{\overset{k_1}{\rightleftarrows}} A|E \underset{k'4}{\overset{k'3}{\rightleftarrows}} B|E \underset{k'2}{\overset{k'1}{\rightleftarrows}} B+E$$

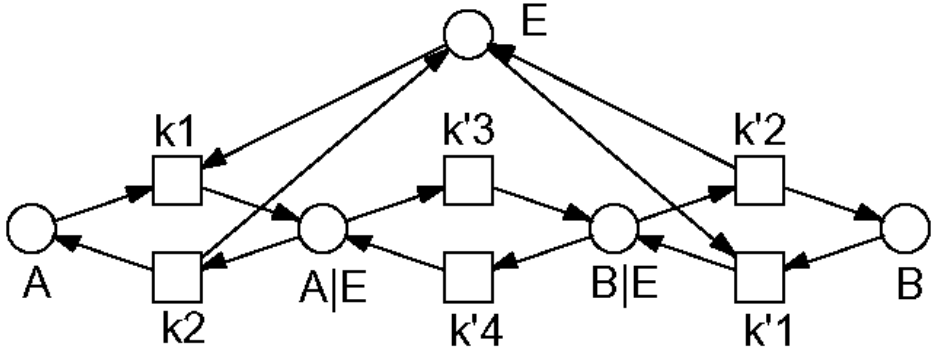

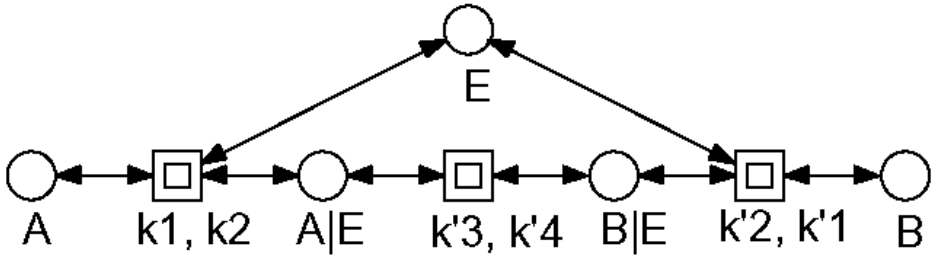

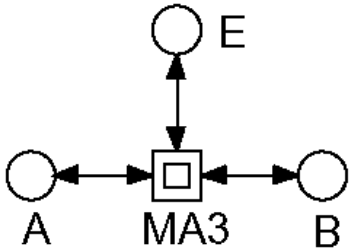

Cell signaling pathways – feedback loops

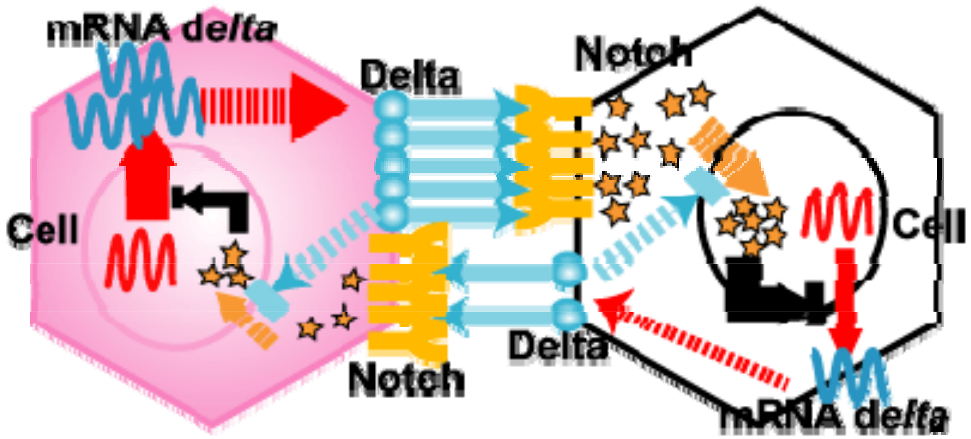

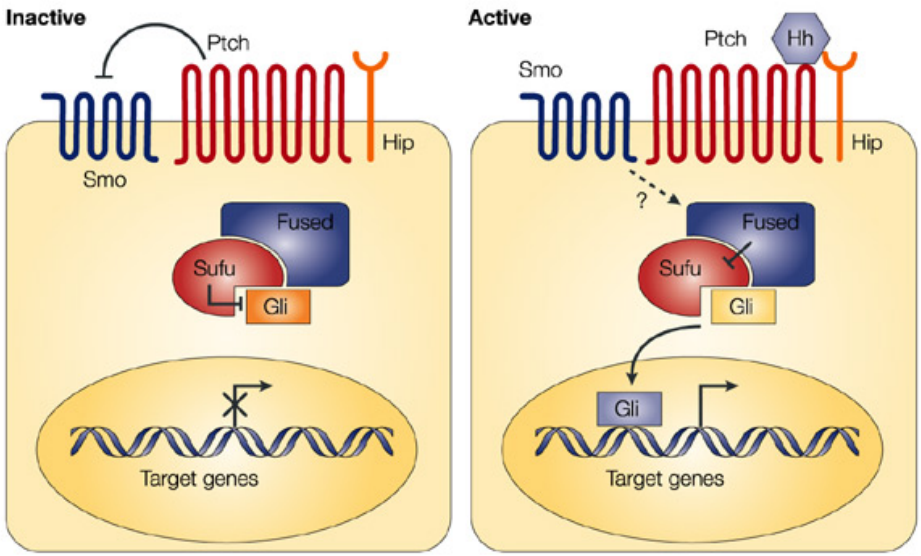

Nature Reviews | Cancer

Cell signaling pathways – feedback loops

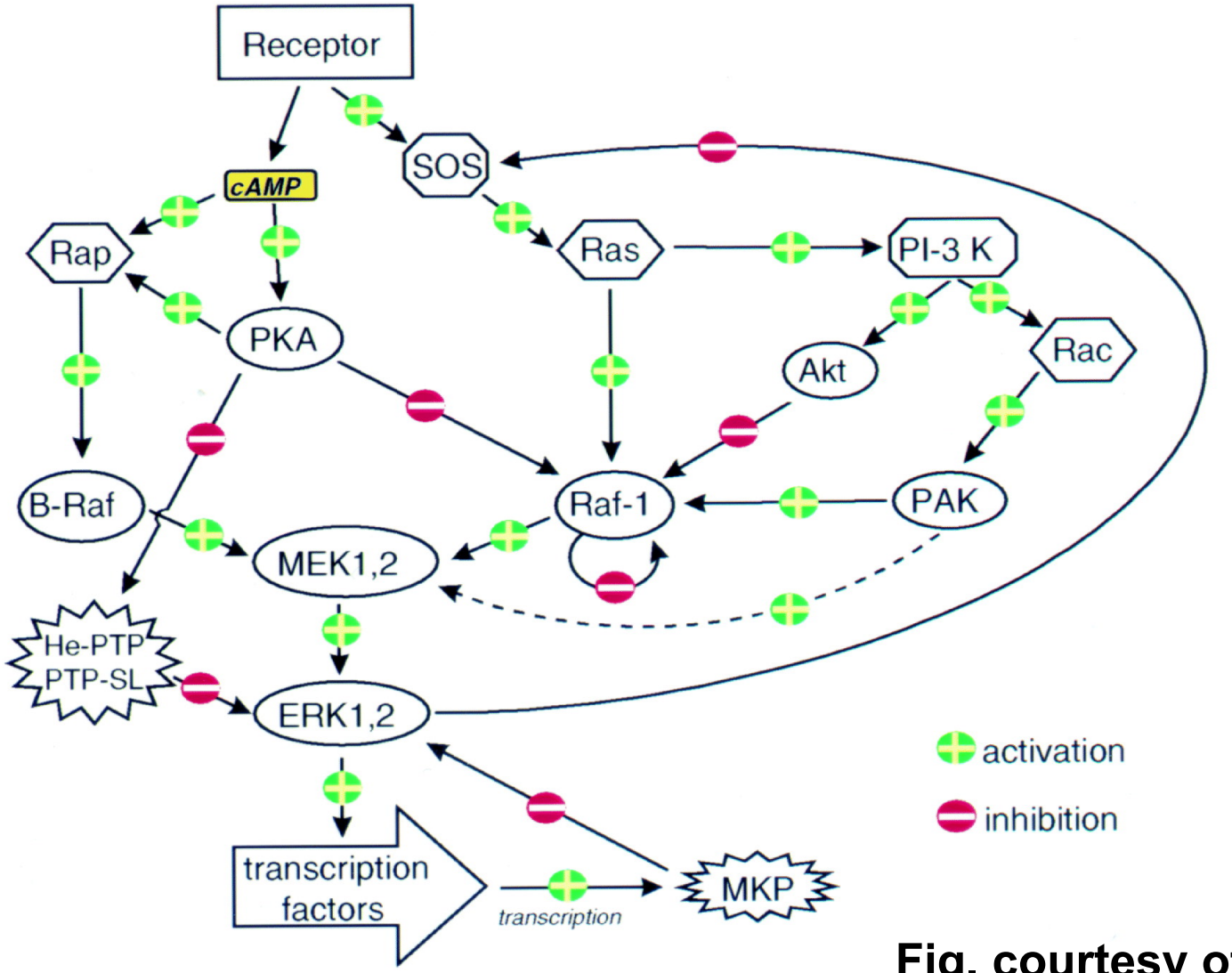

Fig. courtesy of W. Kolch

Feedback loops in Petri Nets

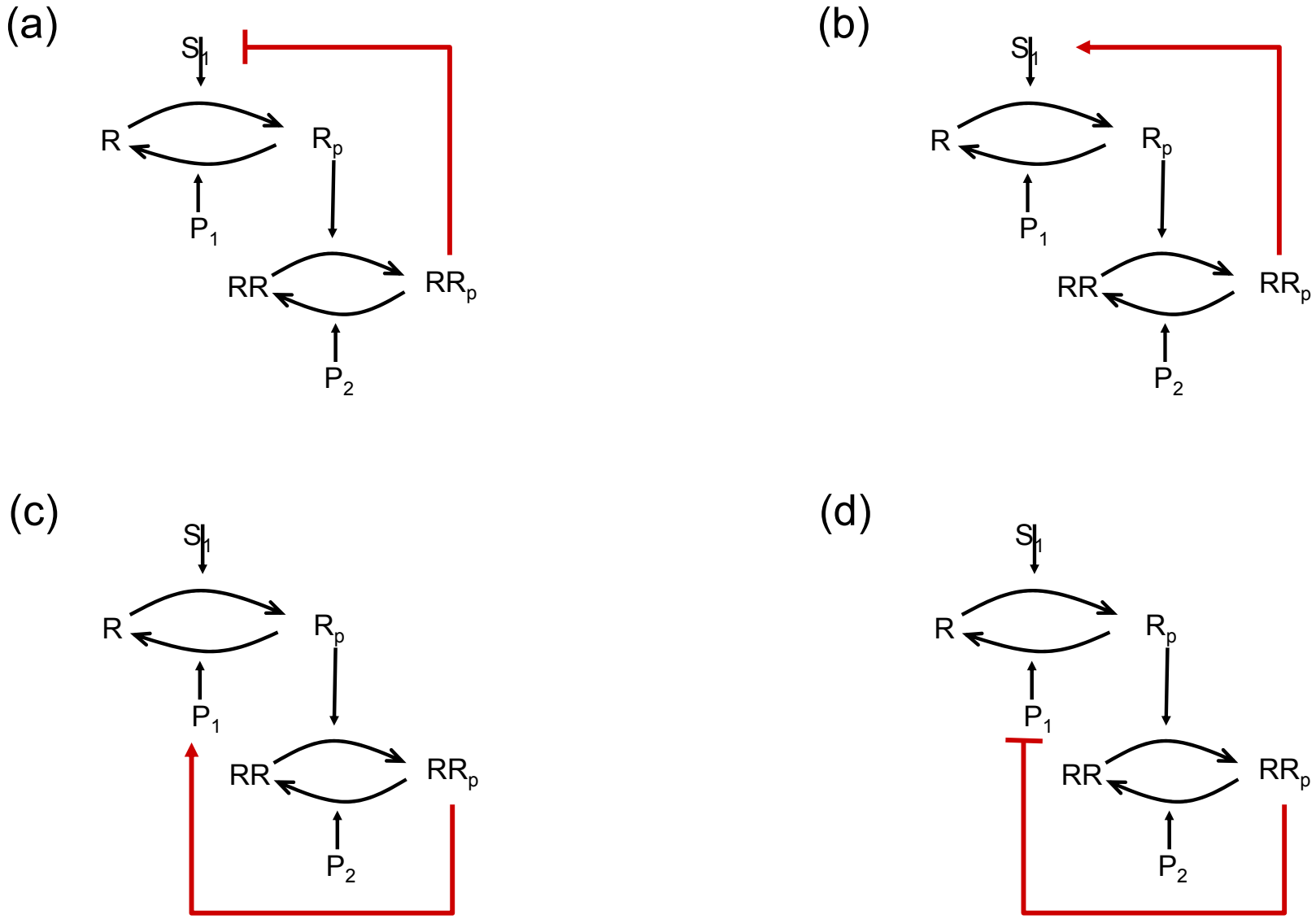

Feedback loops in Petri Nets

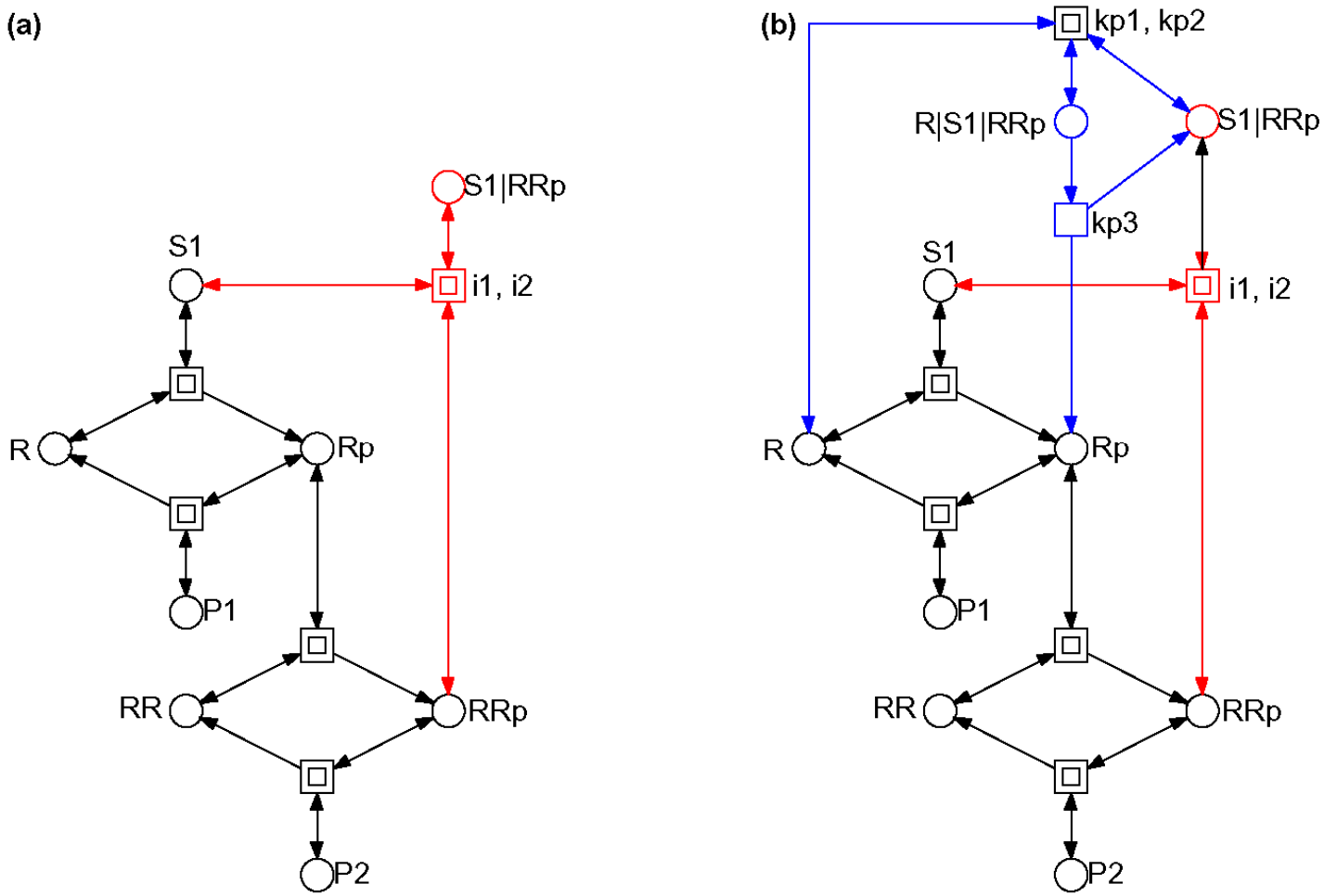

Feedback loops in Petri Nets

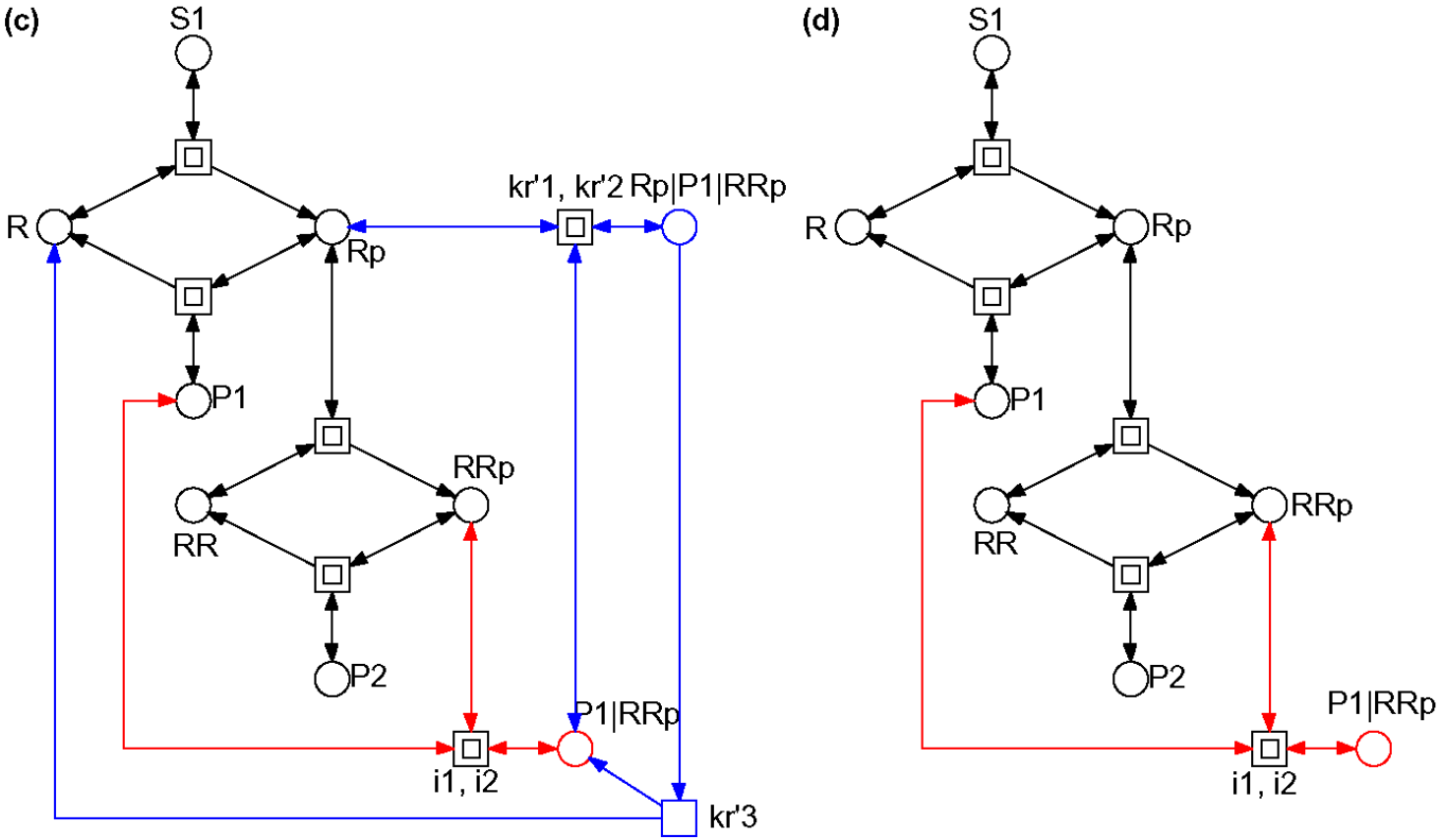

...and added inhibitor

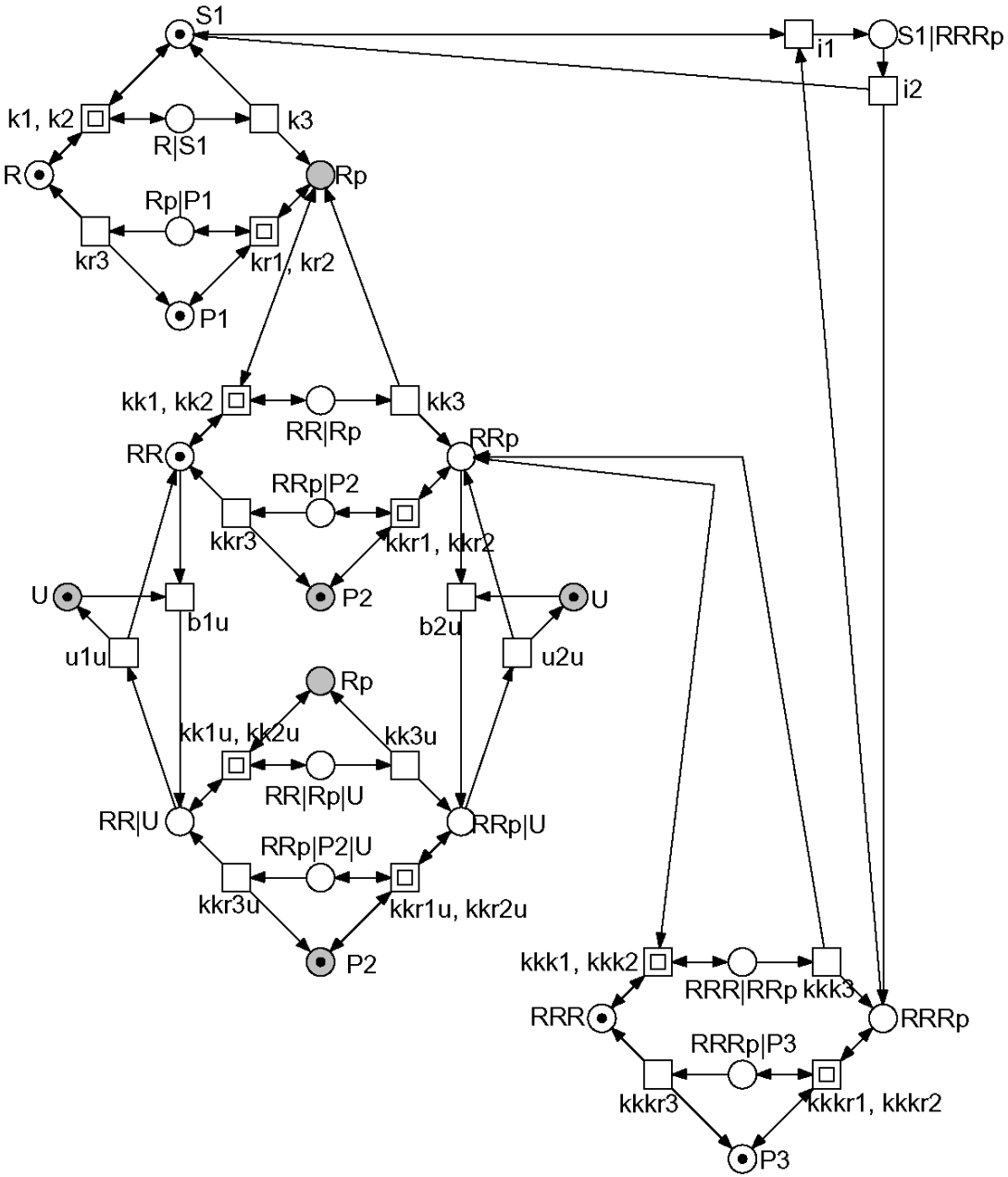

Many PN modelling challengings remain...

- Lack of parameters
  - Qualitative vs. Continuous PN
- Small molecule numbers
  - Deterministics vs. Stochastic models
- Spatial heterogeneity
  - ???

Cell signaling pathways

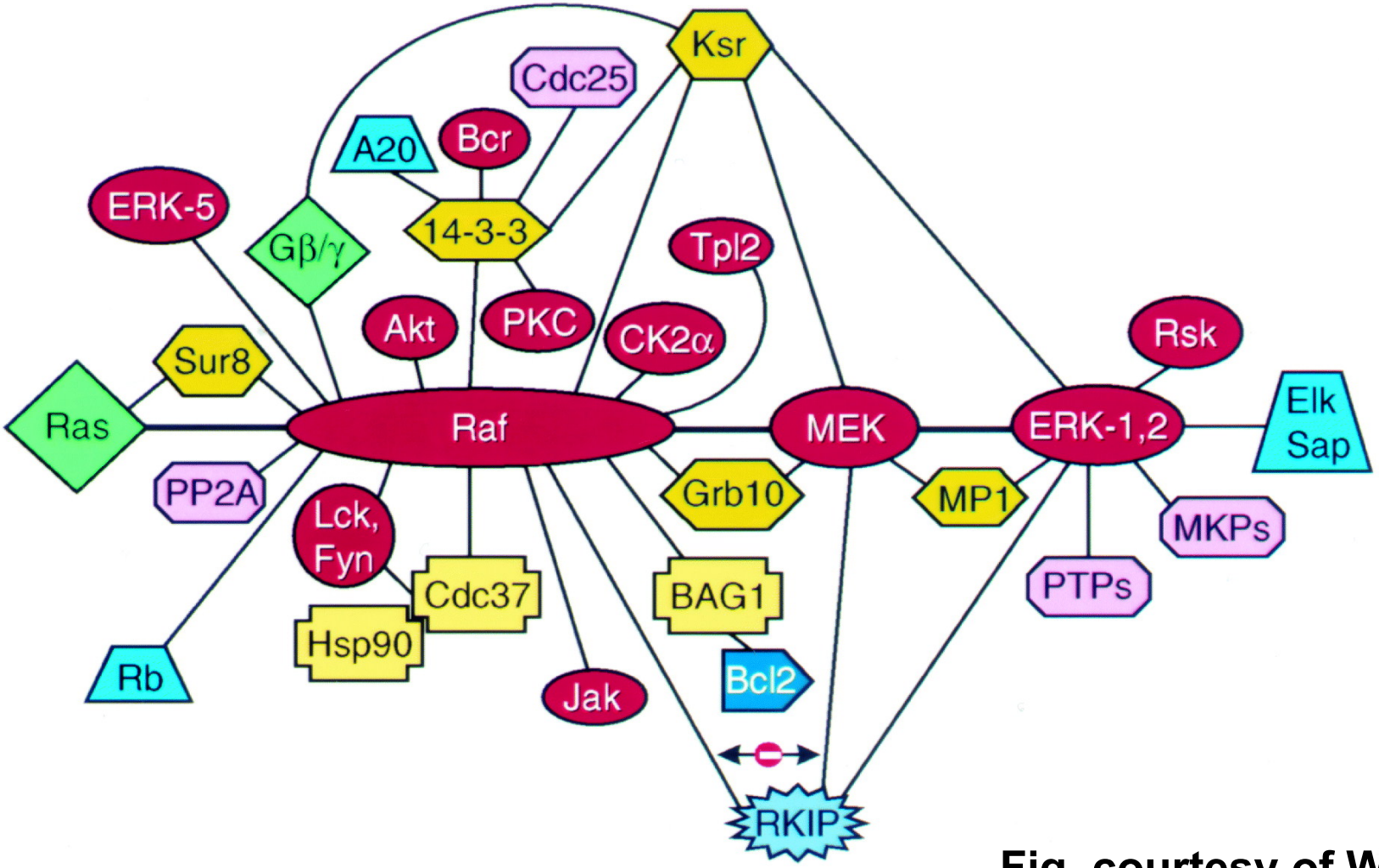

Fig. courtesy of W. Kolch

Stochastic vs. Continuous

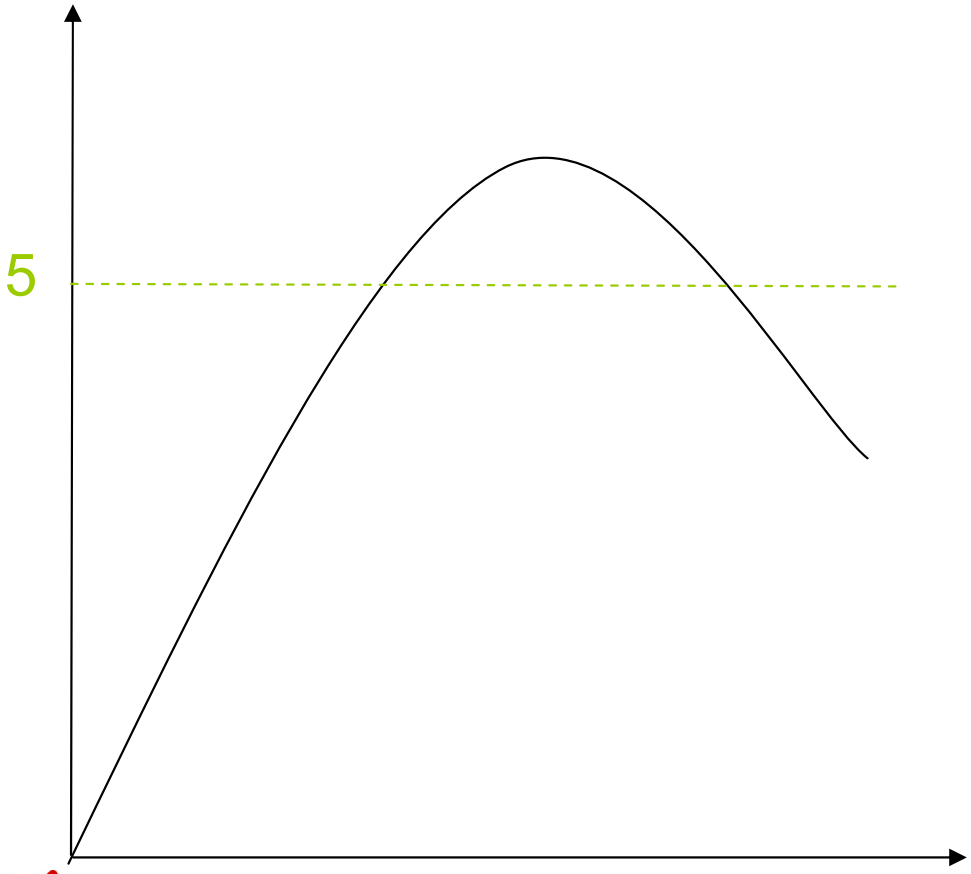

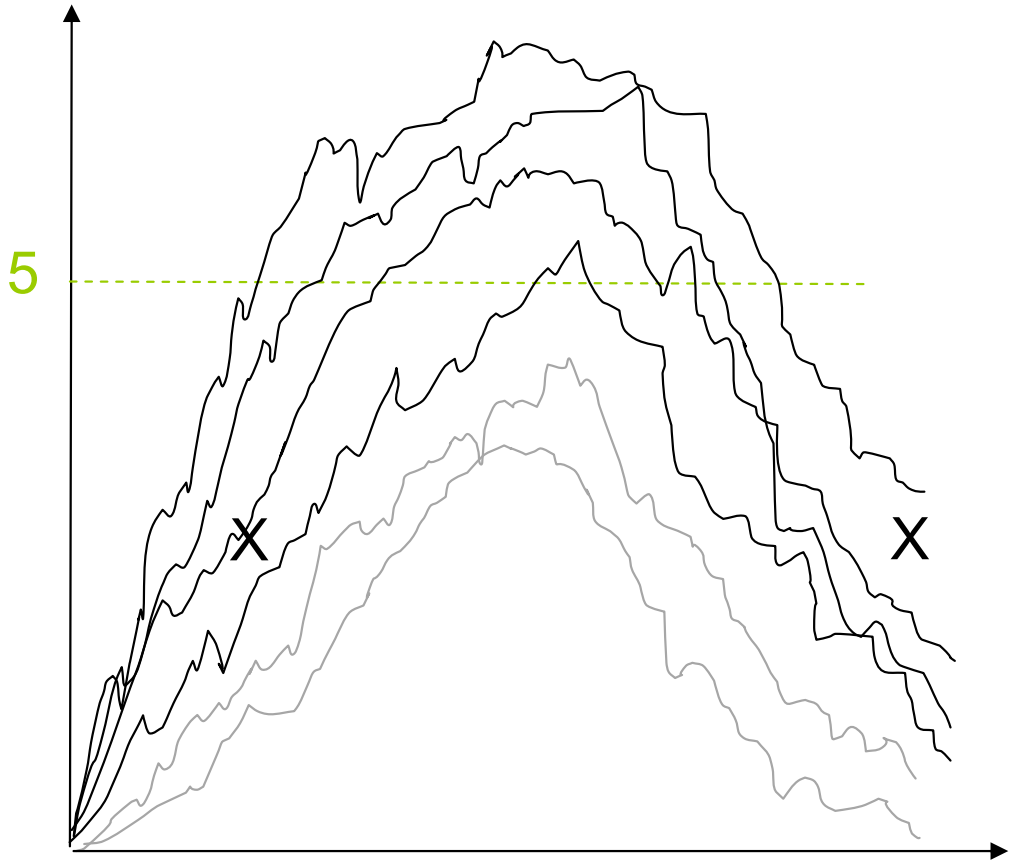

Stochastic model checking
Two Reaction Model

- First a simple model of two reactions:

$$A \xrightarrow{0.01} B$$

$$C \xrightarrow[0.1]{} D$$

- Assess property:
  P=?[A = $X { A = D }]

- "What is the probability that, when A and D first equal each other, they both have $X number of molecules?"

Two Reaction Model

Property:
P=?[A = $X { A = D }]

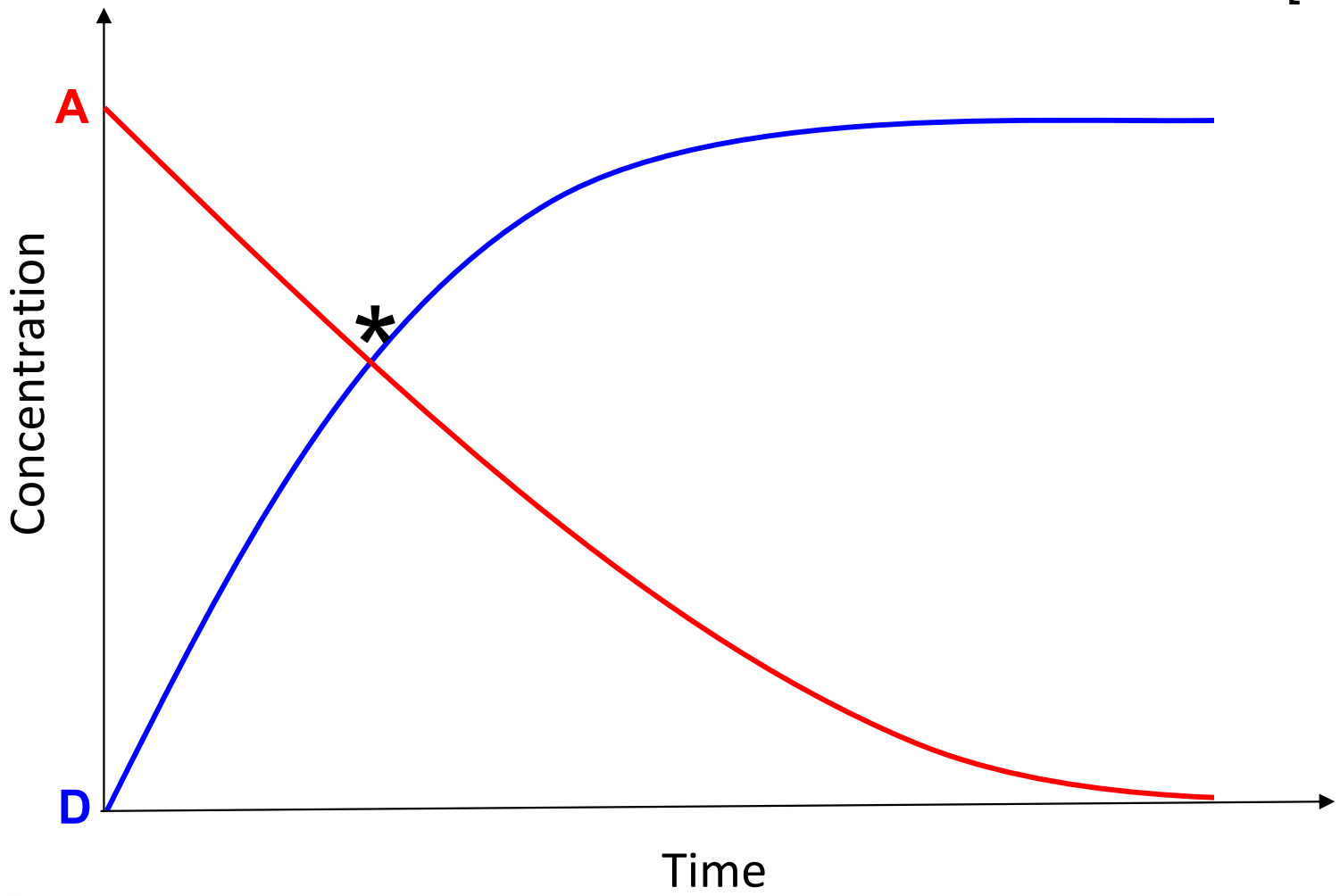

Two Reaction Model

- Set reactants to 10 molecules (model bound to 10 molecules)
- Simulate with Gillespie 1,000 times and model check each output
- Number of simulations which are true over total number of simulations is the probability.
- Also checked the continuous model and the answer is the solid line.

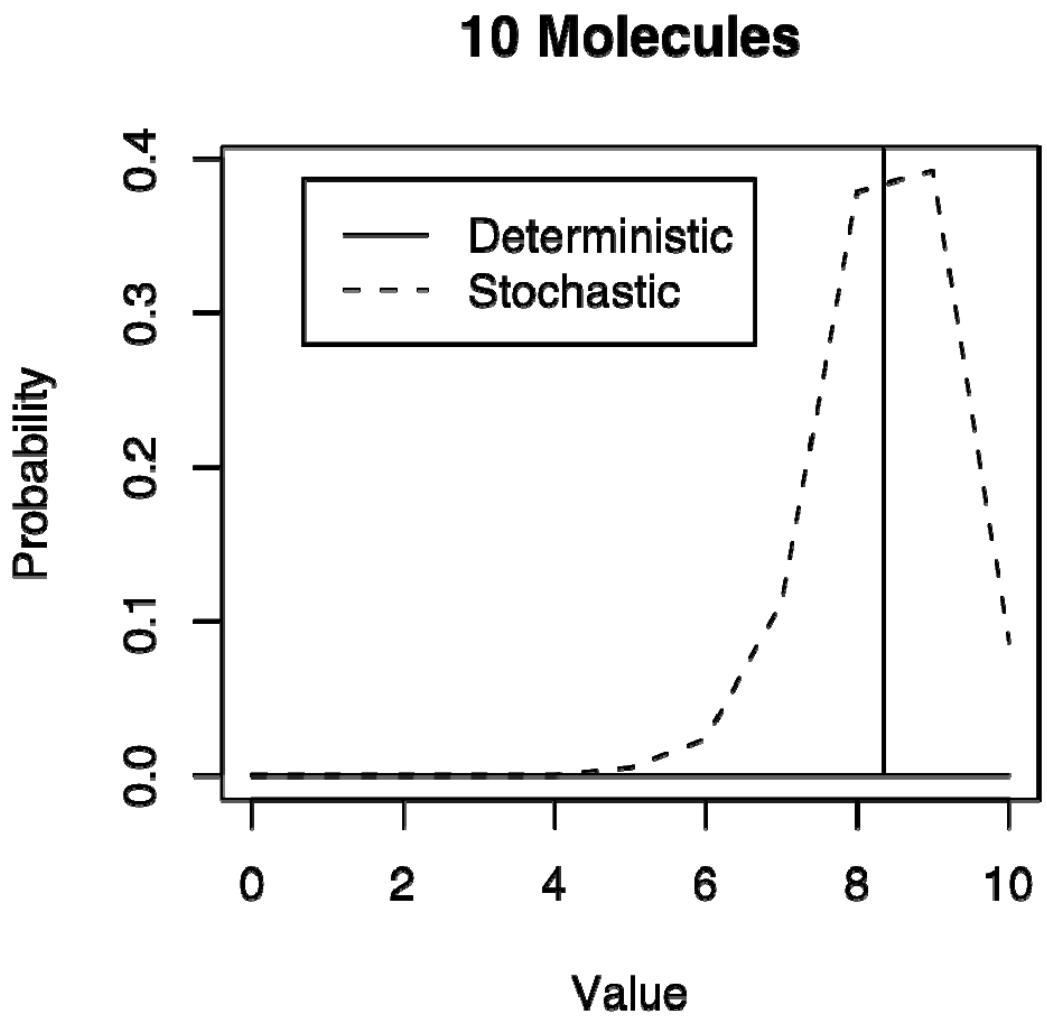

Two Reaction Model

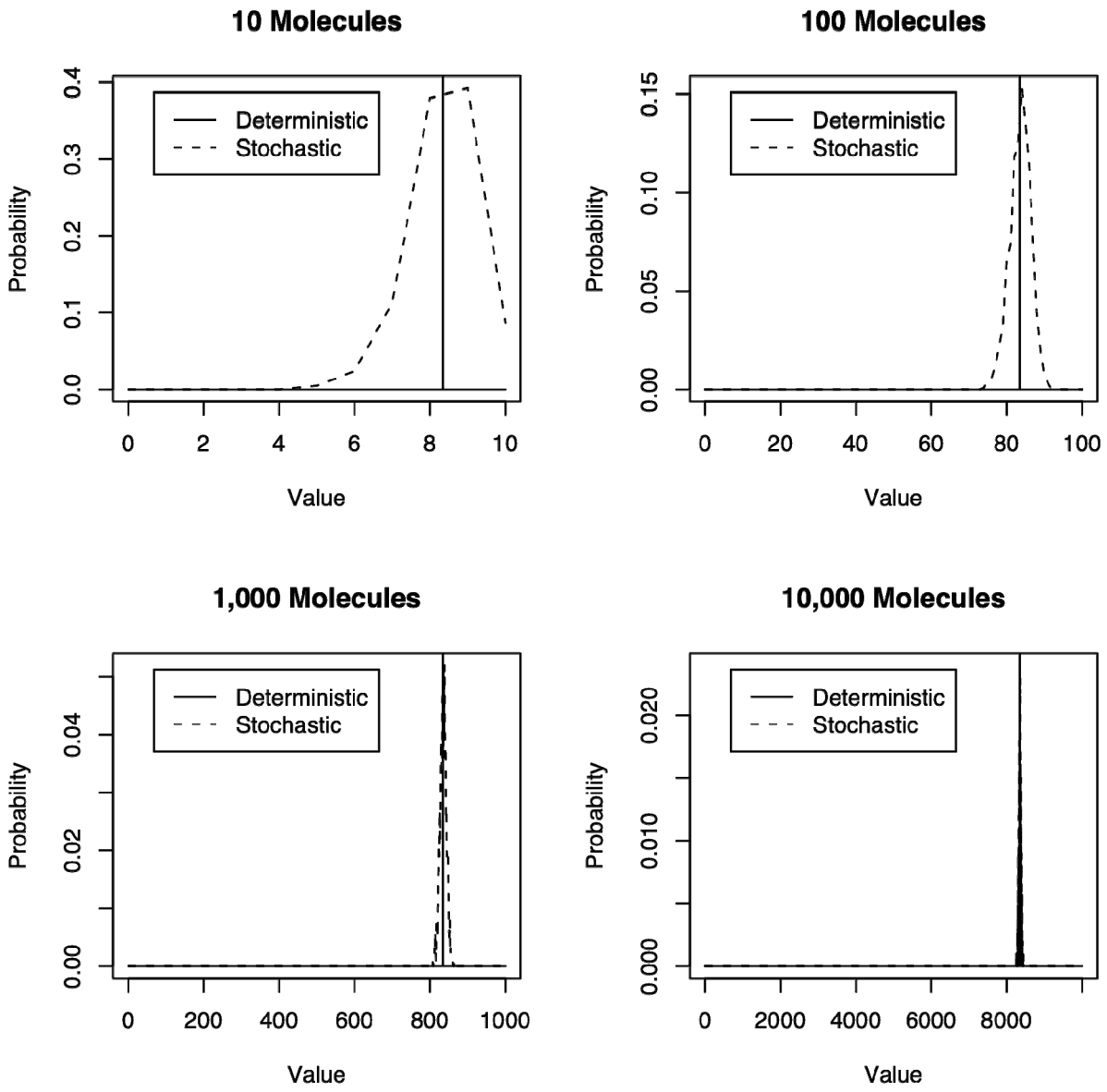

Spatial heterogeneity

- concentrations are different in different places, n = f(t,x,y,z)
- diffusion superimposed on chemical reactions:

$$\frac{\partial n(t)_{xyz}}{\partial t} = -\lambda n(t)_{xyz} \pm \text{diffusion}$$

- partial differential equation

Spatial heterogeneity

- one-dimensional case (diffusion only, and conservation of mass)

$$\frac{\partial n(t,x)}{\partial t}\Delta x = \text{inflow} - \text{outflow}$$

$$\text{outflow} = -K\frac{\partial n(t,x+\Delta x)}{\partial x}$$

$$\text{inflow} = -K\frac{\partial n(t,x)}{\partial x}$$

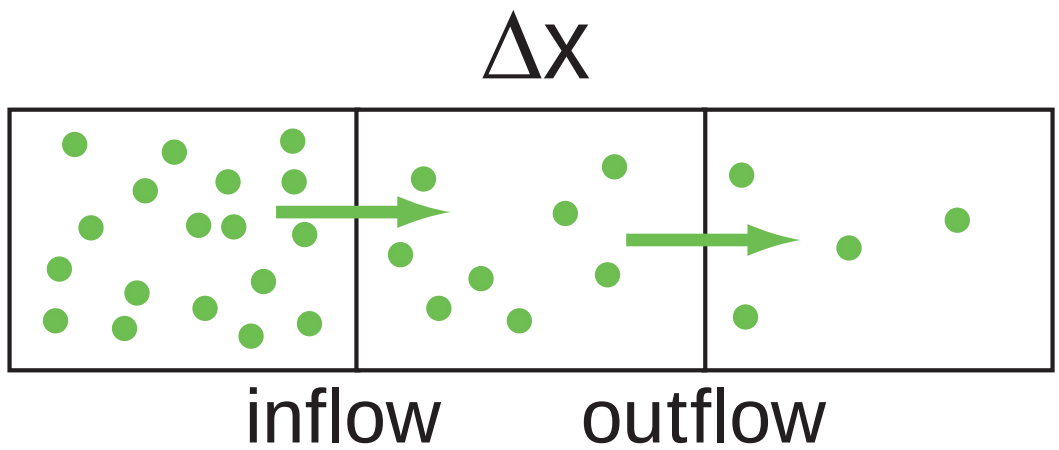

Spatial heterogeneity – 2

$$\frac{\partial n(t,x)}{\partial t}\Delta x = K\frac{\partial n(t,x+\Delta x)}{\partial x} - K\frac{\partial n(t,x)}{\partial x}$$

Transition to differential equation to get diffusion equation :

$$\frac{\partial n(t,x)}{\partial t} = K\frac{\partial^2 n(t,x)}{\partial x^2}$$

Shorthand for three dimensions :

$$\frac{\partial n(t,x,y,z)}{\partial t} = K\nabla^2 n(t,x,y,z)$$

Combination with chemical reaction :

$$\frac{\partial n(t)}{\partial t} = -\lambda n(t) + K\nabla^2 n(t)$$

Acknowledgements

David Gilbert, Brunel University, London

Monika Heiner, Cottbus University, Germany

Robin Donaldson, Glasgow University

NWO Netherlands Organisation for Scientific Research

SysMO Systems Biology of Microorganisms

nbic netherlands bioinformatics centre

bbsrc biotechnology and biological sciences research council

MRC Medical Research Council

university of groningen / groningen bioinformatics centre

The *Groningen Bioinformatics Centre* (Netherlands) is expanding its young and successful team.

Several **PhD and Postdoc positions** are available for creative bioinformaticians with an interest in **Systems Biology, Metabolomics, Proteomics, Quantitative Genetics, Network Reconstruction, Dynamic Modelling…**

- For more information and to apply…
- …visit www.rug.nl/gbic
- …e-mail r.breitling@rug.nl
- …talk to Rainer Breitling at Petri Nets 2009

Recent GBiC papers: Breitling R et al. New surveyor tools for charting microbial metabolic maps **Nature Reviews Microbiology** (2008). Fu J et al. MetaNetwork: a computational protocol for the genetic study of metabolic networks **Nature Protocols** (2007). Swertz MA et al. Beyond standardization: dynamic software infrastructures for systems biology **Nature Reviews Genetics** (2007). Keurentjes JJB et al. The genetics of plant metabolism **Nature Genetics** (2006). Hoeller D et al. Regulation of ubiquitin-binding proteins by monoubiquitylation **Nature Cell Biology** (2006). Bystrykh L et al. Uncovering regulatory pathways that effect hematopoietic stem cell function using 'genetical genomics' **Nature Genetics** (2005).