BME TUTORIAL - PART 6

SUMMARY, CHALLENGES

Rainer Breitling, Groningen, NL
David Gilbert, London, UK
Monika Heiner, Cottbus, DE

SUMMARY

Bio Petri Nets, A Bit of History

- **Carl Adam Petri, 1962, PhD University of Technology Darmstadt**
  -> *basic ideas introduced*

- **early 1970's**
  -> *first papers contributing to Petri net theory*

- **Petri, 1976**
  -> *application to chemical networks mentioned*

- **early 1980's**
  -> *first monographs on Petri net theory*

- **Reddy, 1993**
  -> *first paper on bio application*

- **late 1990's**
  -> *increasing interest for modelling and analysis of bio networks*

A Bit of History

C. A. Petri, November 2006

A Bit of History

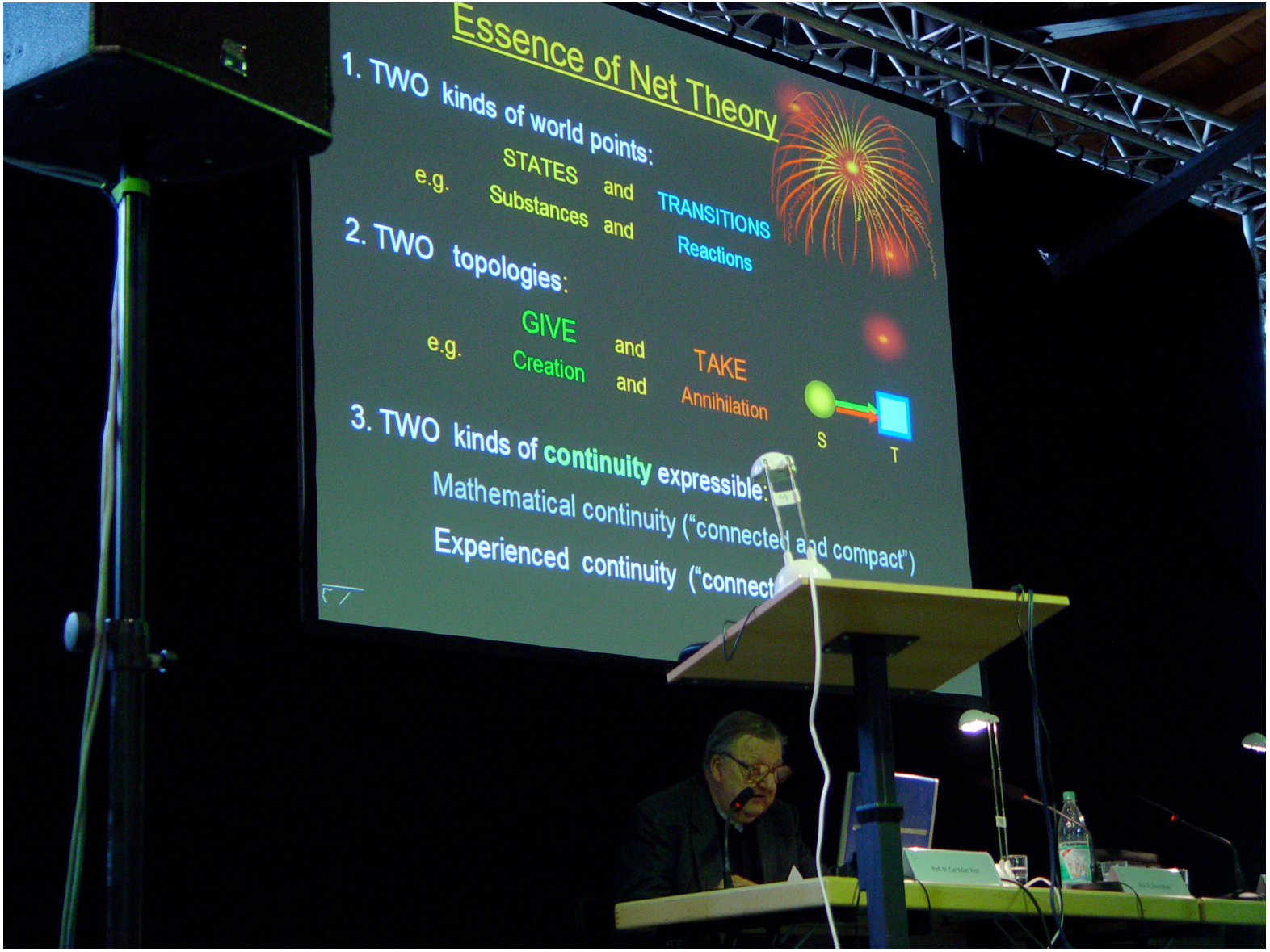

SUMMARY

- **representation of bio networks by Petri nets**
  - -> *partial order representation* -> *better comprehension*
  - -> *formal semantics* -> *sound analysis techniques*
  - -> *unifying view* -> *various abstraction levels*

SUMMARY

- **representation of bio networks by Petri nets**
  - -> *partial order representation* -> *better comprehension*
  - -> *formal semantics* -> *sound analysis techniques*
  - -> *unifying view* -> *various abstraction levels*

- **purposes**
  - -> *animation* -> *to experience the model*
  - -> *model validation against consistency criteria* -> *to increase confidence*
  - -> *qualitative / quantitative behaviour prediction* -> *experiment design, new insights*

SUMMARY

- **representation of bio networks by Petri nets**
  - -> *partial order representation* -> *better comprehension*
  - -> *formal semantics* -> *sound analysis techniques*
  - -> *unifying view* -> *various abstraction levels*

- **purposes**
  - -> *animation* -> *to experience the model*
  - -> *model validation against consistency criteria* -> *to increase confidence*
  - -> *qualitative / quantitative behaviour prediction* -> *experiment design, new insights*

- **step-wise model development**
  - -> *qualitative model* -> *discrete Petri nets*
  - -> *discrete quantitative model* -> *stochastic Petri nets*
  - -> *continuous quantitative model* -> *continuous Petri nets = ODEs*

CHALLENGES

- **discrete models:**
  increasing level number = increasing accuracy

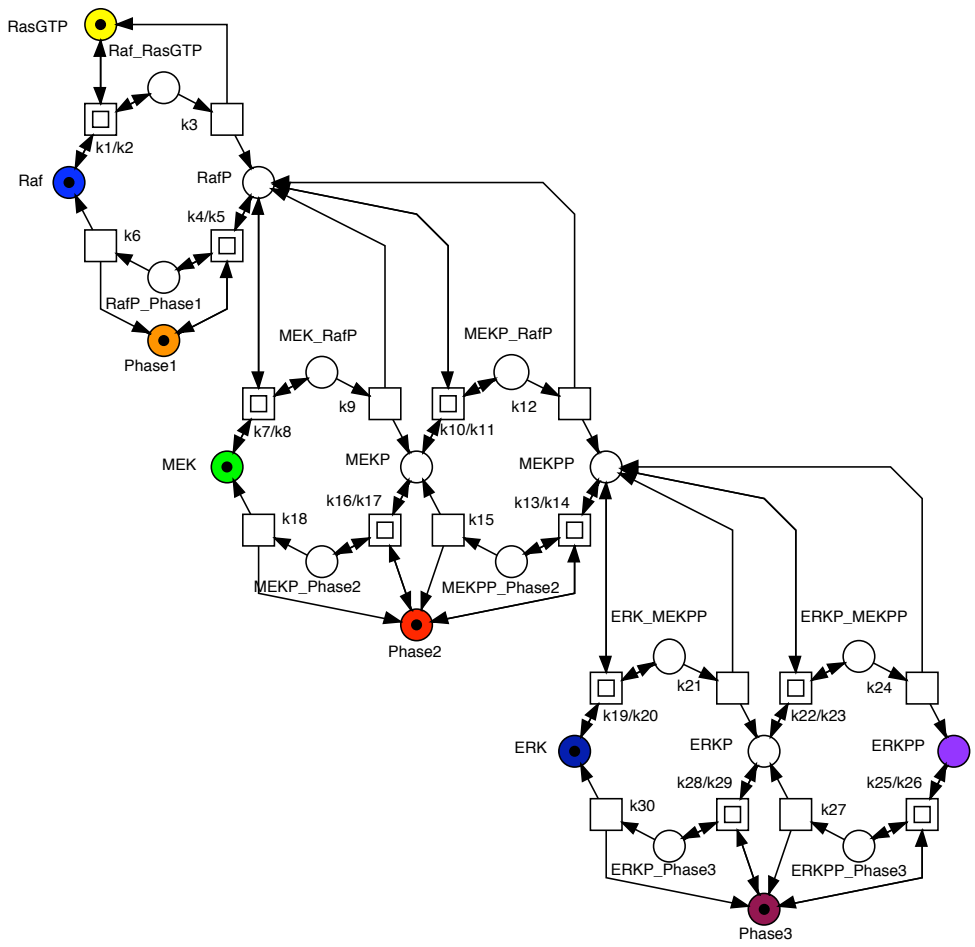

CHALLENGE 1

- ***BUT,*** *monotonous liveness holds for substructures only !*

[STARKE 1990]

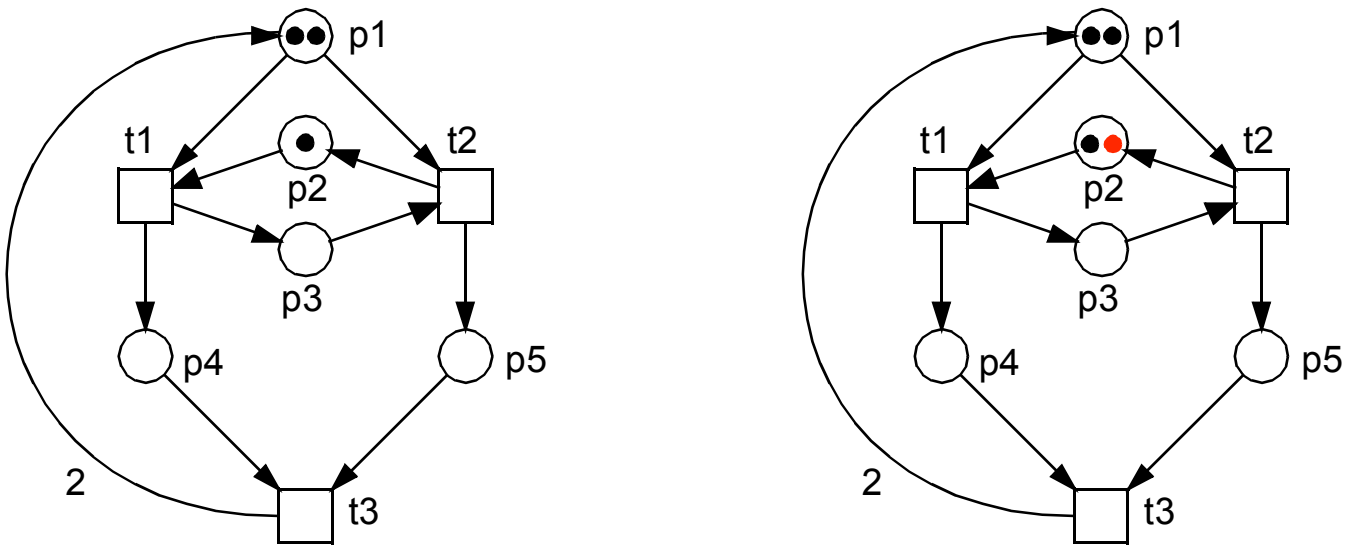

ORD	PUR	HOM	NBM	CSV	SCF	CON	SC	FT0	TF0	FP0	PF0	NC
N	Y	Y	Y	Y	N	Y	Y	N	N	N	N	**ES**
DTP	CPI	CTI	SCTI	SB	k-b	1-b	DCF	DSt	DTr	LIV	REV	
N	Y	Y	Y	Y	Y	N	Y	0	N	Y	Y	
							N	**1**	**Y**	**N**	**N**	

CHALLENGE 2

- **sharing structure = sharing properties**

  BUT, *that's not always the case ! to which extend ?*

  -> *stochastic and continuous behaviour may differ; why ? when ?*

  -> *relation: discrete & continuous behaviour ?*

CHALLENGE 2

- **sharing structure = sharing properties**

  BUT, *that's not always the case ! to which extend ?*

  -> stochastic and continuous behaviour may differ; why ? when ?

  -> relation: discrete & continuous behaviour ?

- **two continuous Petri nets, generating the same ODEs, but having different qualitative behaviour**

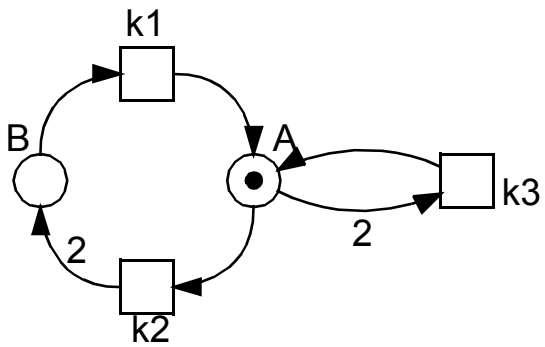

PUR	ORD	HOM	NBM	CSV	SCF	CON	SC	FT0	TF0	FP0	PF0	NC
N	N	N	N	N	N	Y	Y	N	N	N	N	FC
DTP	CPI	CTI	SCTI	SB	k-B	1-B	DCF	DSt	DTr	LIV	REV	
Y	N	Y	Y	-	N	N	-	**0**	-	-	-	

CHALLENGE 2

- **sharing structure = sharing properties**

  BUT, *that's not always the case ! to which extend ?*

  -> stochastic and continuous behaviour may differ; why ? when ?

  -> relation: discrete & continuous behaviour ?

- **two continuous Petri nets, generating the same ODEs, but having different qualitative behaviour**

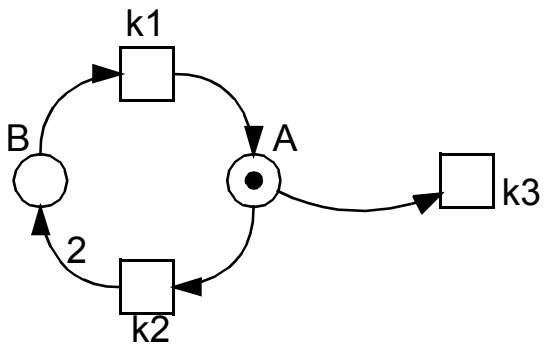

PUR	ORD	HOM	NBM	CSV	SCF	CON	SC	FT0	TF0	FP0	PF0	NC
Y	N	Y	Y	N	N	Y	N	N	Y	N	N	FC
DTP	CPI	CTI	SCTI	SB	k-B	1-B	DCF	DSt	DTr	LIV	REV	
N	N	Y	Y	-	N	N	-	**1**	**Y**	**N**	-	

CHALLENGE 3

- **unbounded qualitative model + time = bounded model**
  - -> *stochastic models*
  - -> *continuous models / ODEs*

} *simulation*

CHALLENGE 3

- **unbounded qualitative model + time = bounded model**
  - -> *stochastic models*
  - -> *continuous models / ODEs*

  } *simulation*

- **Should also work for timed Petri nets !**
  - -> *steady state behaviour*

- **What are timed Petri nets ?**
  - -> *qualitative --- time --- stochastic - continuous - hybrid Petri nets*
  - -> *modelling power : TURING*
  - -> *analysis power : discrete state space construction (if bounded)*

- **How to derive time parameters ?**
  - -> *T-invariants give steady state behaviour*

T-INVARIANTS

- **T-invariants** **-> *multisets of transitions***
  -> *integer solutions x of* $Cx = 0, x \neq 0, x \geq 0$ -> *Parikh vector*

- **T-invariants = (multi-) sets of transitions = Parikh vector**
  -> *zero effect on marking*
  -> *reproducing a marking / system state*

- **two interpretations**
  1. *partially ordered transition sequence* **-> behaviour understanding**
     of transitions occuring one after the other
     -> *substance / signal flow*
  2. *relative transition firing rates*
     of transitions occuring permanently & concurrently
     -> *steady state behaviour*

TRANSFORMATION, EX1

A + 2 B -> C + 3 D

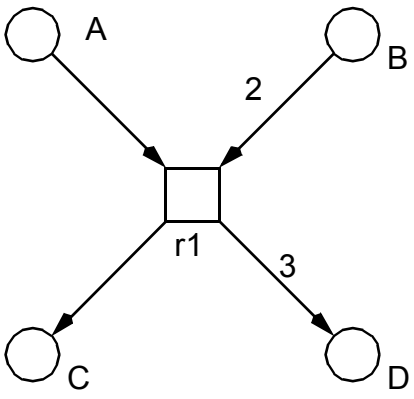

-> properties as time-free net

INA																
ORD	HOM	NBM	PUR	CSV	SCF	CON	SC	Ft0	tF0	Fp0	pF0	MG	SM	FC	EFC	ES
N	Y	N	Y	N	Y	Y	N	Y	Y	N	N	Y	N	Y	Y	Y
CPI	CTI	B	SB	REV	DSt	BSt	DTr	DCF	L	LV	L&S					
N	Y	Y	N	N	N	?	N	Y	N	Y	N					

Transformation, Ex1

A + 2 B -> C + 3 D

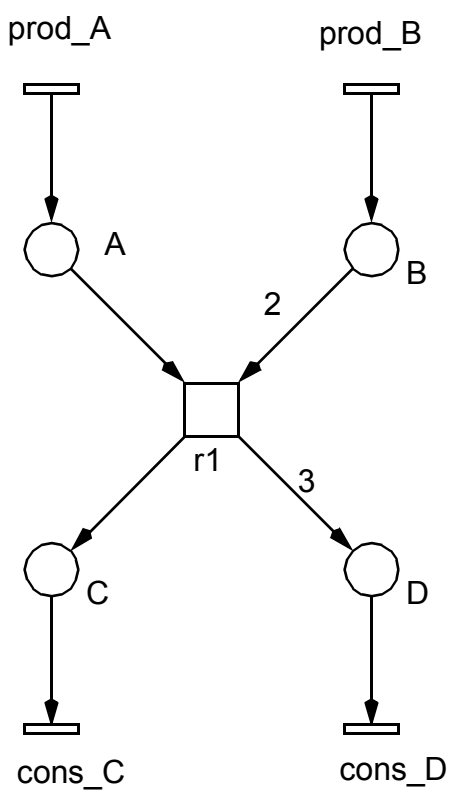

-> properties as time-free net

INA																
ORD	HOM	NBM	PUR	CSV	SCF	CON	SC	Ft0	tF0	Fp0	pF0	MG	SM	FC	EFC	ES
N	Y	N	Y	N	Y	Y	N	Y	Y	N	N	Y	N	Y	Y	Y
CPI	CTI	B	SB	REV	DSt	BSt	DTr	DCF	L	LV	L&S					
N	Y	N	N	Y	N	?	N	Y	Y	Y	N					

TRANSFORMATION, EX1

A + 2 B -> C + 3 D

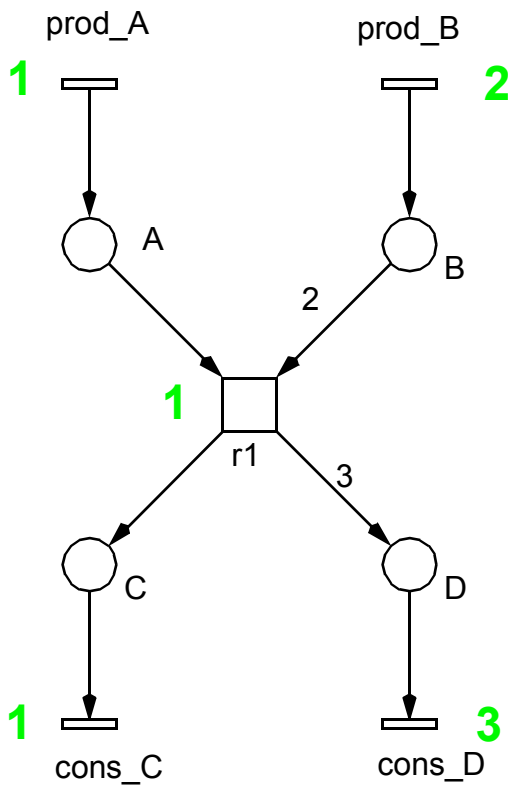

T-INVARIANT

-> properties as time-free net

INA																
ORD	HOM	NBM	PUR	CSV	SCF	CON	SC	Ft0	tF0	Fp0	pF0	MG	SM	FC	EFC	ES
N	Y	N	Y	N	Y	Y	N	Y	Y	N	N	Y	N	Y	Y	Y
CPI	CTI	B	SB	REV	DSt	BSt	DTr	DCF	L	LV	L&S					
N	Y	N	N	Y	N	?	N	Y	Y	Y	N					

TRANSFORMATION, EX1

A + 2 B -> C + 3 D

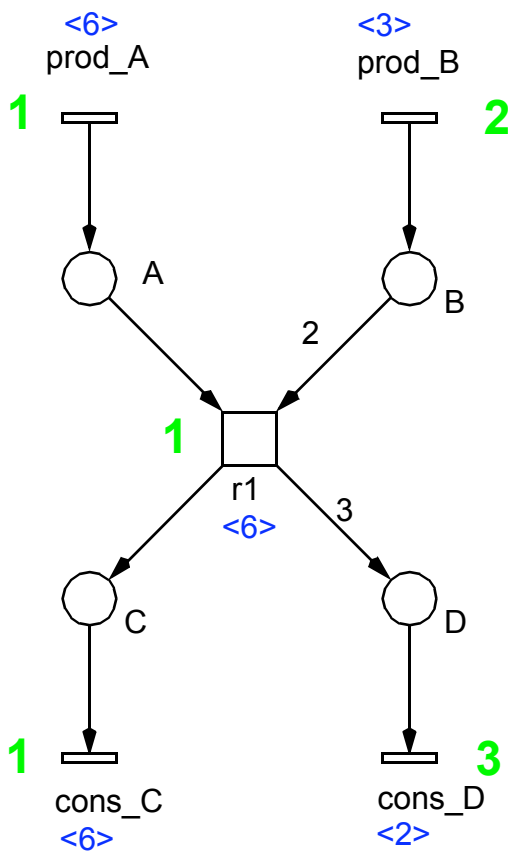

T-INVARIANT

-> properties as time net

INA																
ORD	HOM	NBM	PUR	CSV	SCF	CON	SC	Ft0	tF0	Fp0	pF0	MG	SM	FC	EFC	ES
N	Y	N	Y	N	Y	Y	N	Y	Y	N	N	Y	N	Y	Y	Y
CPI	CTI	B	SB	REV	DSt	BSt	DTr	DCF	L	LV	L&S					
N	Y	Y	N	N	N	?	N	Y	Y	Y	N					

TRANSFORMATION, EX2

A ->2 B, A -> 3 C

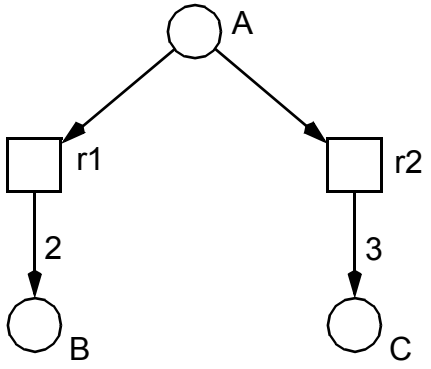

-> properties as time-free net

INA

ORD	HOM	NBM	PUR	CSV	SCF	CON	SC	Ft0	tF0	Fp0	pF0	MG	SM	FC	EFC	ES
N	Y	N	Y	N	Y	Y	N	Y	Y	N	N	Y	N	Y	Y	Y

CPI	CTI	B	SB	REV	DSt	BSt	DTr	DCF	L	LV	L&S
N	Y	Y	N	N	N	?	N	N	N	Y	N

TRANSFORMATION, EX2

A ->2 B, A -> 3 C

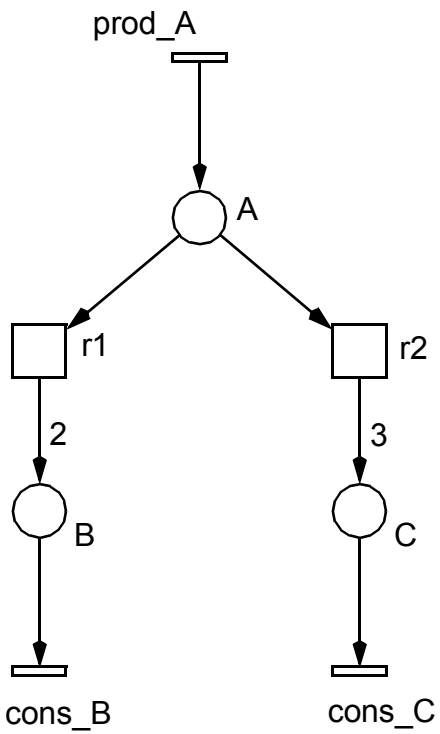

-> properties as time-free net

INA																
ORD	HOM	NBM	PUR	CSV	SCF	CON	SC	Ft0	tF0	Fp0	pF0	MG	SM	FC	EFC	ES
N	Y	N	Y	N	Y	Y	N	Y	Y	N	N	Y	N	Y	Y	Y
CPI	CTI	B	SB	REV	DSt	BSt	DTr	DCF	L	LV	L&S					
N	Y	N	N	Y	N	?	N	N	Y	Y	N					

TRANSFORMATION, EX2

A ->2 B, A -> 3 C

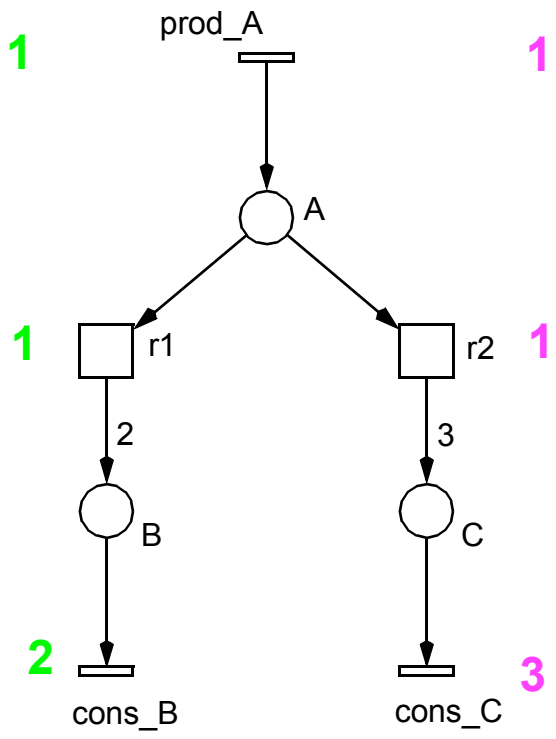

T-INVARIANT1

T-INVARIANT2

-> properties as time-free net

INA																
ORD	HOM	NBM	PUR	CSV	SCF	CON	SC	Ft0	tF0	Fp0	pF0	MG	SM	FC	EFC	ES
N	Y	N	Y	N	Y	Y	N	Y	Y	N	N	Y	N	Y	Y	Y
CPI	CTI	B	SB	REV	DSt	BSt	DTr	DCF	L	LV	L&S					
N	Y	N	N	Y	N	?	N	N	Y	Y	N					

TRANSFORMATION, EX2

A ->2 B, A -> 3 C

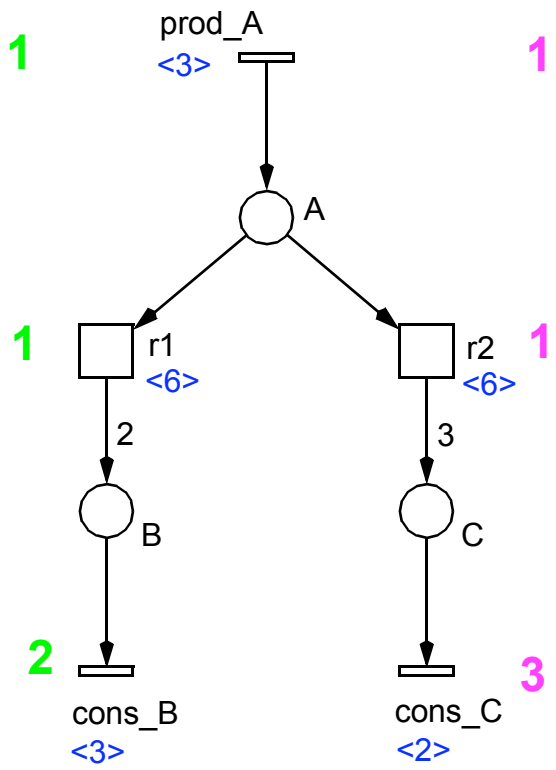

T-INVARIANT1

T-INVARIANT2

-> properties as time net

INA																
ORD	HOM	NBM	PUR	CSV	SCF	CON	SC	Ft0	tF0	Fp0	pF0	MG	SM	FC	EFC	ES
N	Y	N	Y	N	Y	Y	N	Y	Y	N	N	Y	N	Y	Y	Y
CPI	CTI	B	SB	REV	DSt	BSt	DTr	DCF	L	LV	L&S					
N	Y	Y	N	N	N	?	N	Y	Y	Y	N					

RG(Ex2), Part 1

- **transient state**

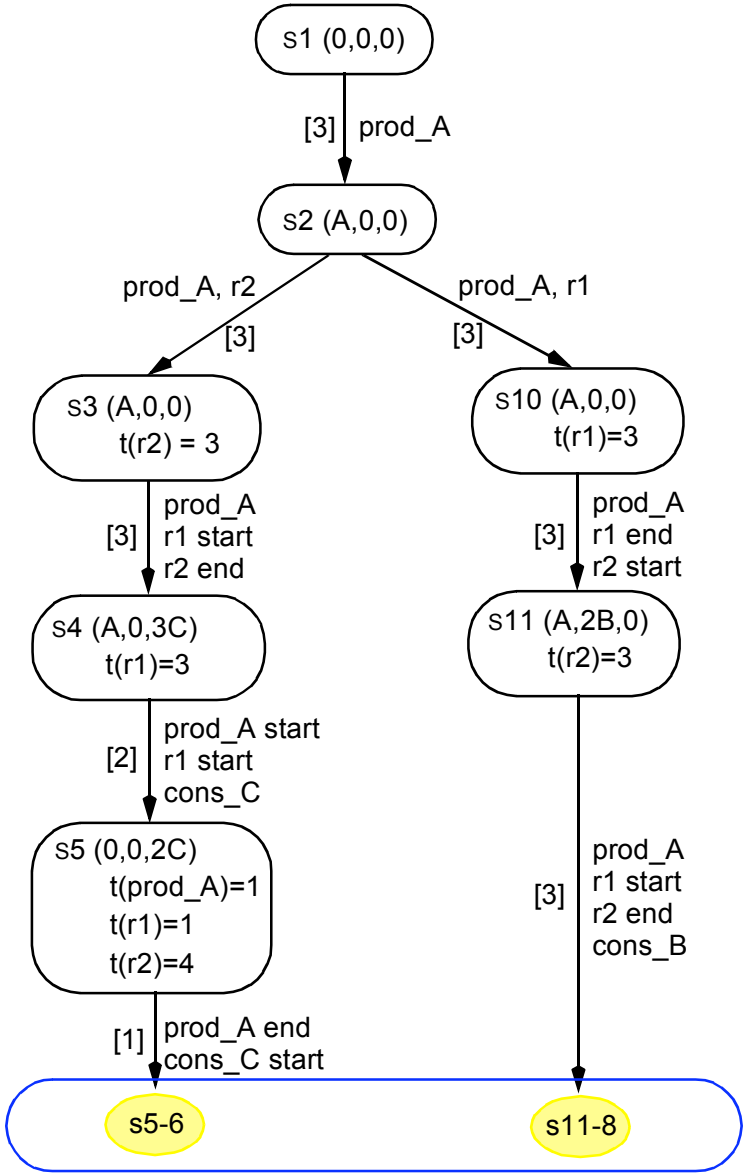

RG(Ex2), Part 2

- **steady state**

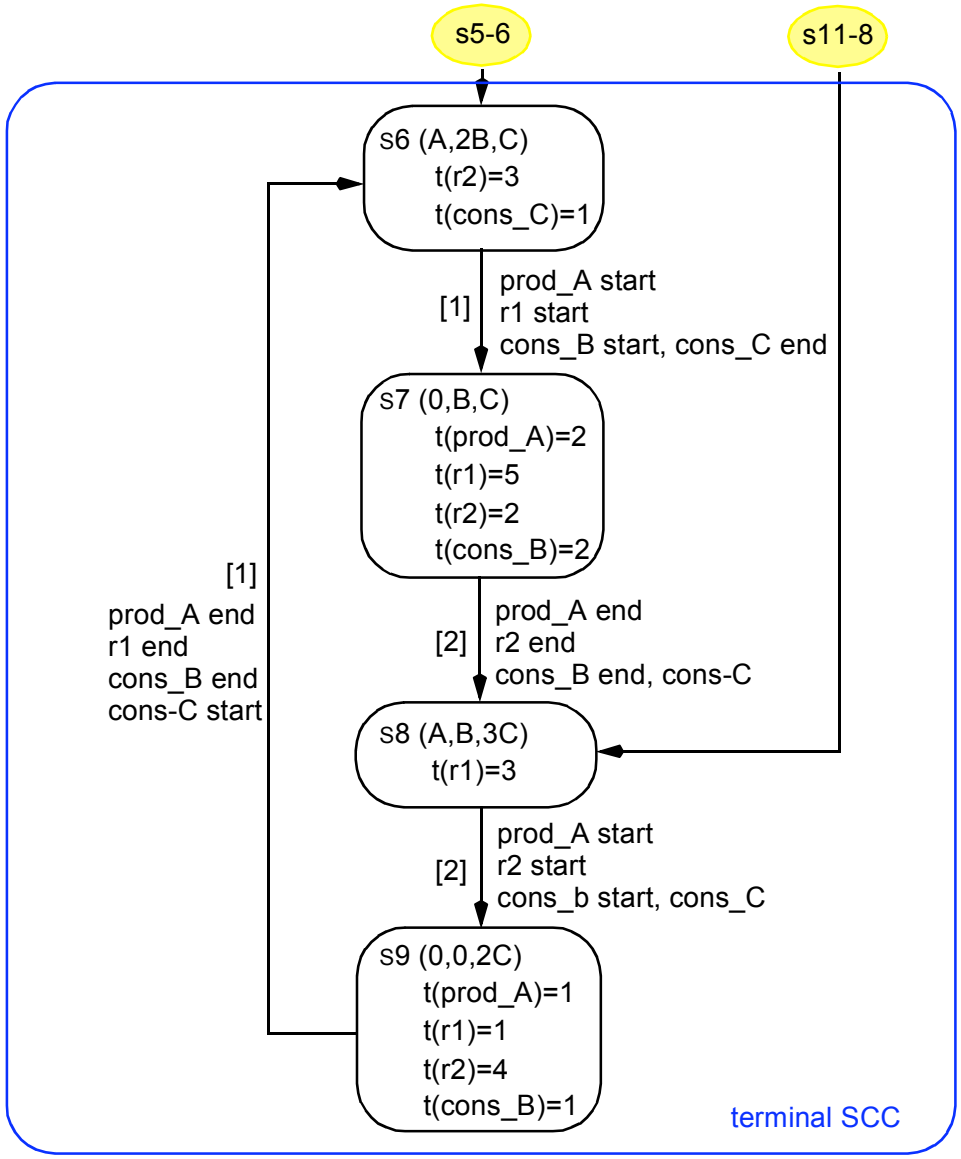

RG(Ex2), Terminal SCC

- **contains all transitions**
  - -> *always running*
  - -> *start / end at different time points*
- **contains all minimal T-invariants**
- **timing diagram**
- **relative transition firing rates**

prod_A	:	**1**	**+**		**1**
r1	:	**1**	**r2**	:	**1**
cons_B	:	**2**	**cons_C**	:	**3**

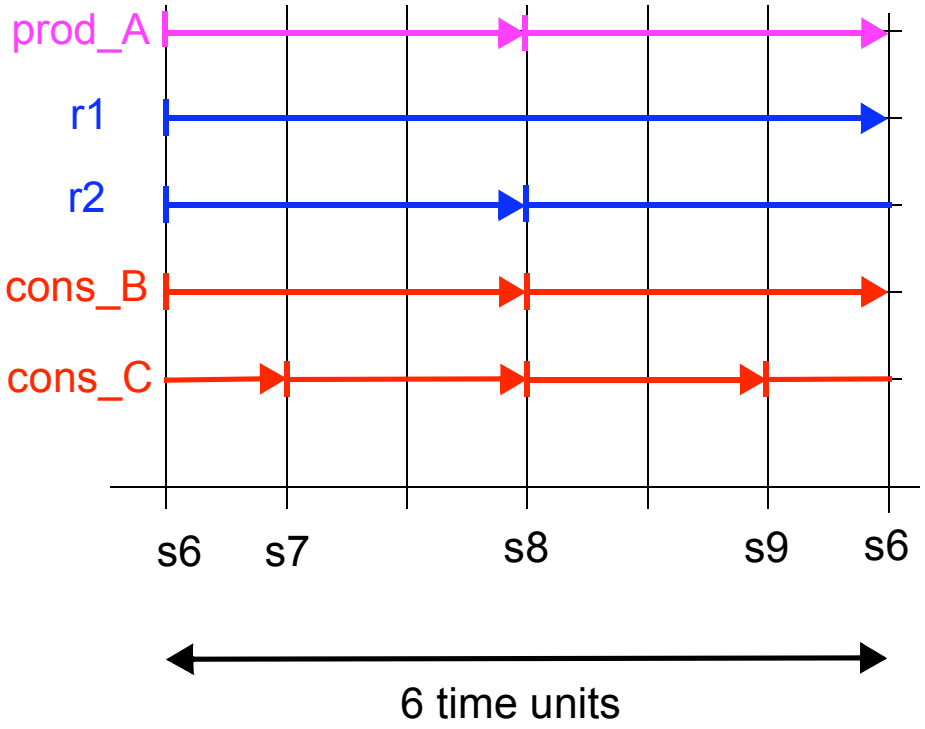

Ex1+ Ex2, Summary

- **CTI,**
  but not CPI

- **transient state**
  - -> *initial behaviour to reach steady state*
  - -> *not REV*
  - -> *generally, not DCF*

- **steady state behaviour**
  - -> *terminal scc*
  - -> *here, BND*
  - -> *here, DCF*

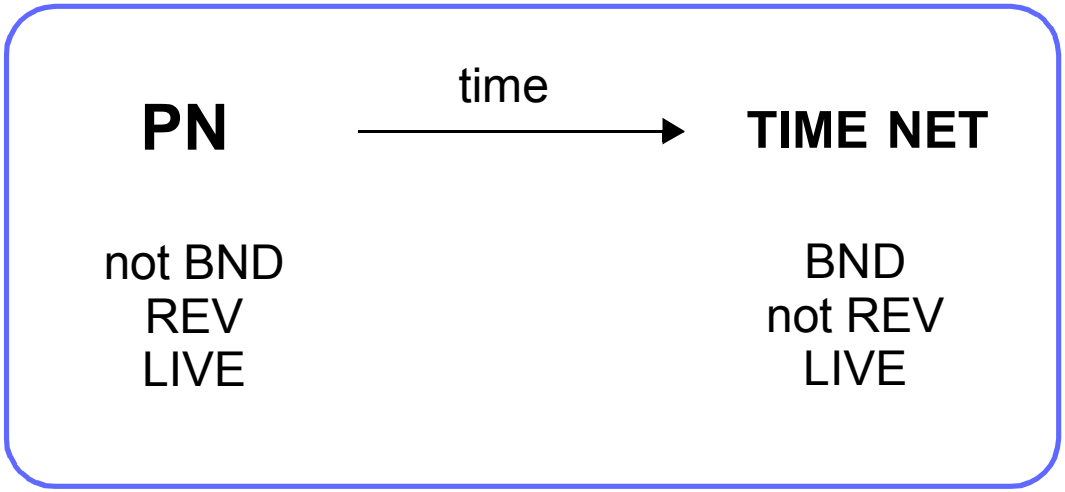

However,
this does not always work !

COUNTEREXAMPLE 1

1-working time for all transitions;
FC, there are no deadlocks, traps, p-invariants, besides the pseudo-P-invariant (A , co_A);

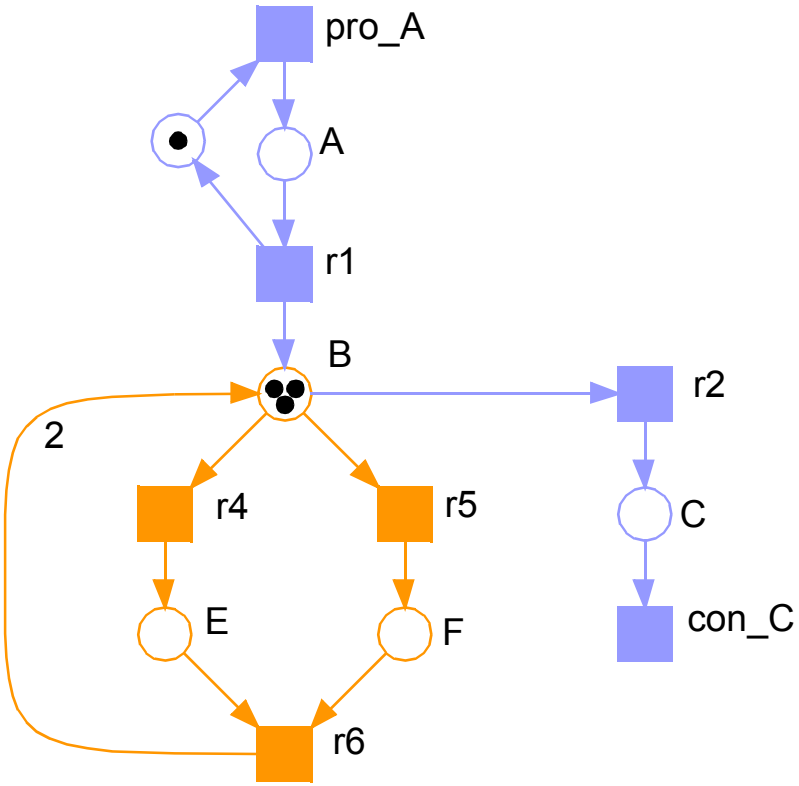

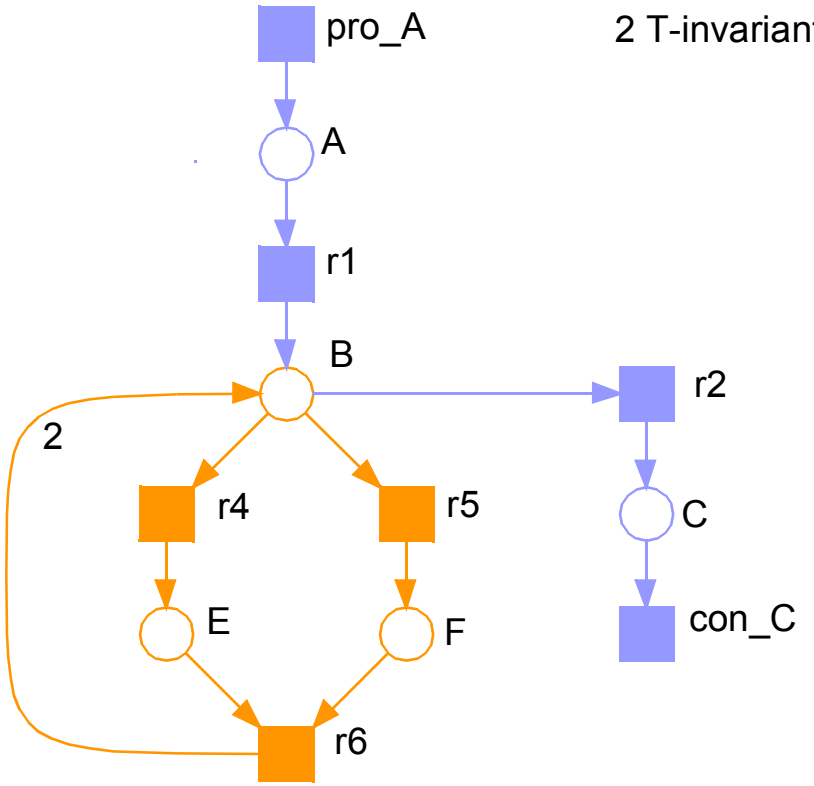

2 T-invariants

wBND & LIVE for the given initial marking

COUNTEREXAMPLE 2

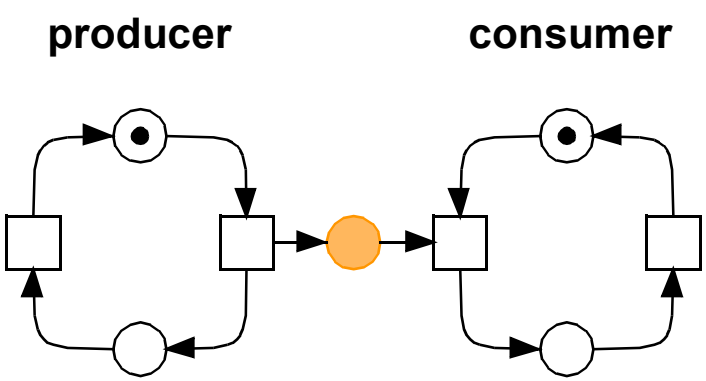

weakly bounded

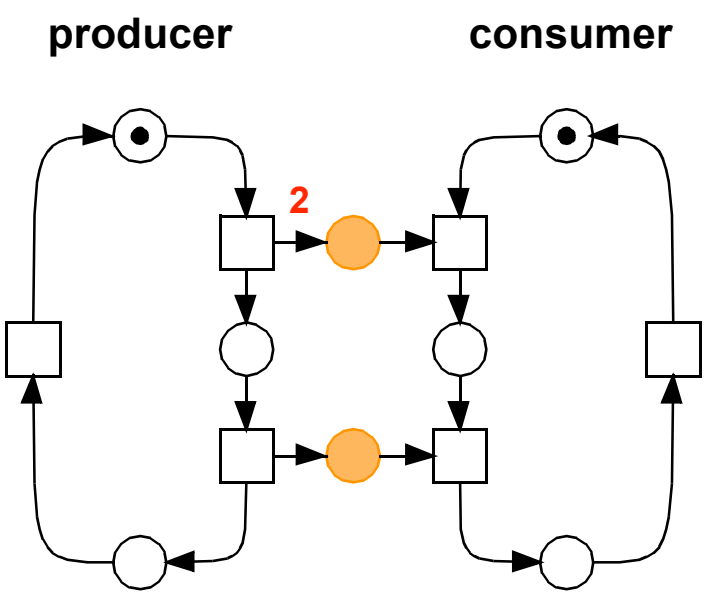

not weakly bounded

[DESEL 2006], WEAKLY BOUNDED PETRI NETS; AWPN '06

CHALLENGE 3 - TIME-DEPENDENT BOUNDEDNESS

- **given: time-free Petri net**
  - -> *unbounded*
  - -> *live (supposed to be)*

- **wanted: corresponding time-dependent Petri net**
  - -> *(weakly) bounded*
  - -> *(still) live*

CHALLENGE 3 - TIME-DEPENDENT BOUNDEDNESS

- **given: time-free Petri net**
  - -> *unbounded*
  - -> *live (supposed to be)*

- **wanted: corresponding time-dependent Petri net**
  - -> *(weakly) bounded*
  - -> *(still) live*

- **questions**
  - -> *for which structures does it work / does it not work ?*
  - -> *are there sufficient / necessary conditions ?*
  - -> *which time intervals make the net bounded ?*
  - -> *which time intervals preserve a transition sequence's realizability ?*

- **consistency criterion for (steady state) bio networks !?**

CHALLENGE 4 - TIME-DEPENDENT LIVENESS

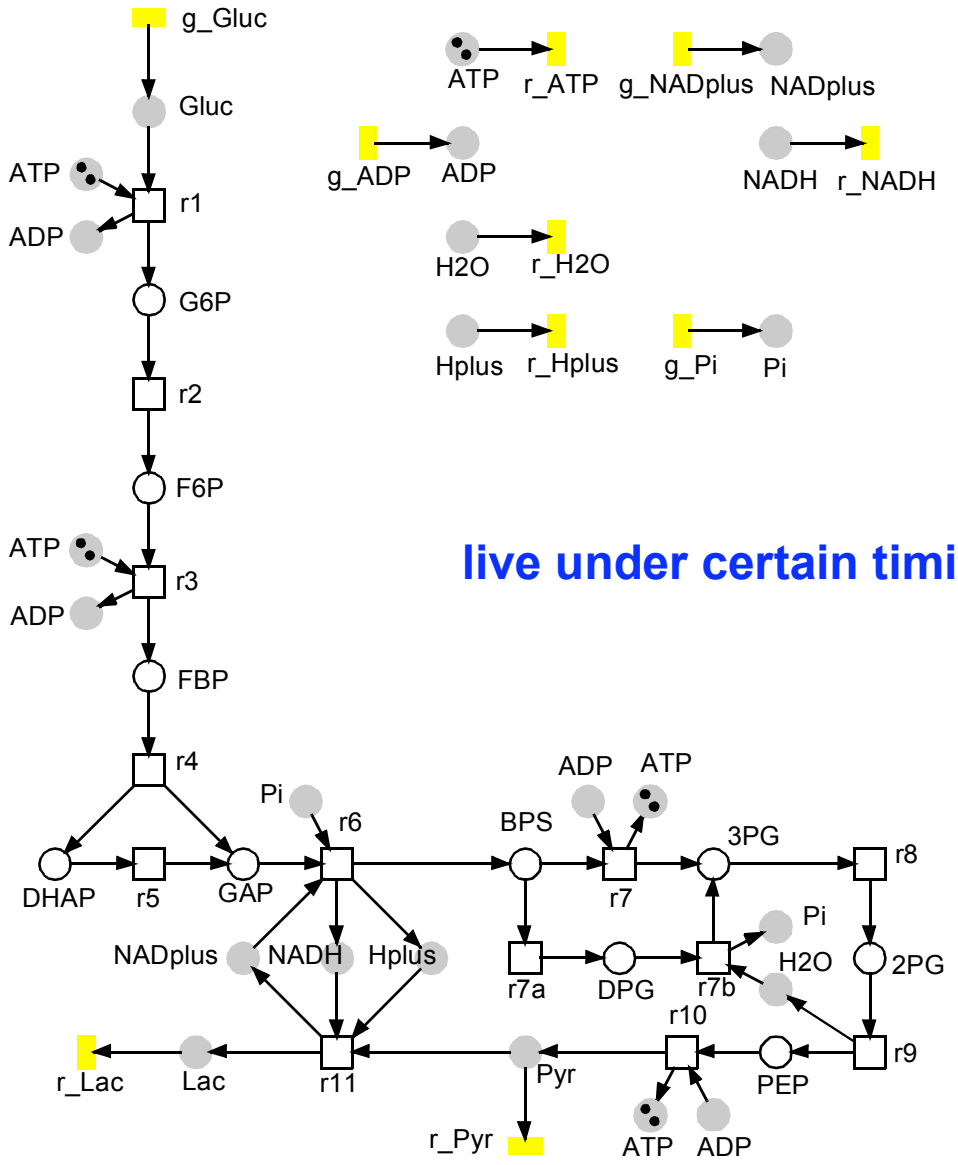

live under certain timing constraints

CHALLENGE 4 - TIME-DEPENDENT LIVENESS

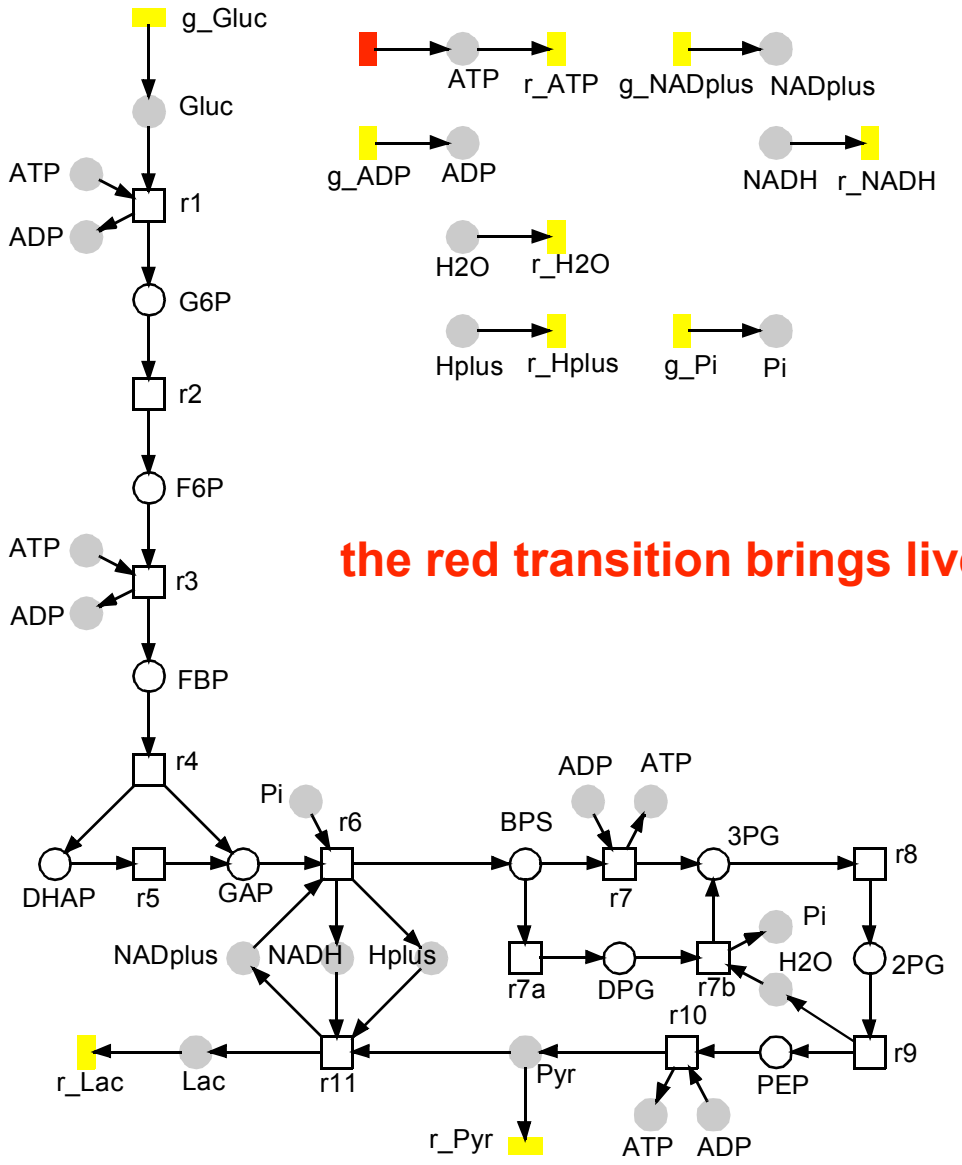

the red transition brings liveness under any timing

CHALLENGE 4 - TIME-DEPENDENT LIVENESS

- **given: time-free Petri net**

  -> *non-live*

- **question**

  -> *under which conditions are there time restrictions, making this Petri net live ?*

CHALLENGES, SUMMARY

- **increasing level number = increasing accuracy**

  BUT, *monotonous liveness holds for substructures only !*

- **sharing structure = sharing properties**

  BUT, *that's not always the case ! to which extend ?*

  -> stochastic and continuous behaviour may differ; why ? when ?

  -> relation: qualitative & continuous behaviour ?

- **unbounded qualitative model + time = bounded model**

  BUT, *that's not always the case !*

  -> (structural) criteria for time-dependent boundedness ?

- **non-live qualitative model + time = live model**

  BUT, *how to do it in general the case ?*

  -> (structural) criteria for time-dependent liveness ?

FURTHER READING

- D Gilbert, R Breitling, M Heiner, R Donaldson:
  An Introduction to BioModel Engineering, Illustrated for Signal Transduction Pathways;
  Proc. WMC 2008, Springer LNCS 5391, pp. 13-28, 2009.

- M Heiner, D Gilbert, R Donaldson:
  Petri Nets for Systems and Synthetic Biology
  SFM 2008, Springer LNCS 5016, pp. 215-264, 2008.

- R Breitling, D Gilbert, M Heiner, R Orton:
  A structured approach for the engineering of biochemical network models, illustrated for signalling pathways;
  Briefings in Bioinformatics, September 2008; 9: 404 - 421.

- **Your paper to one or the other of the challenges ?**

THANKS !

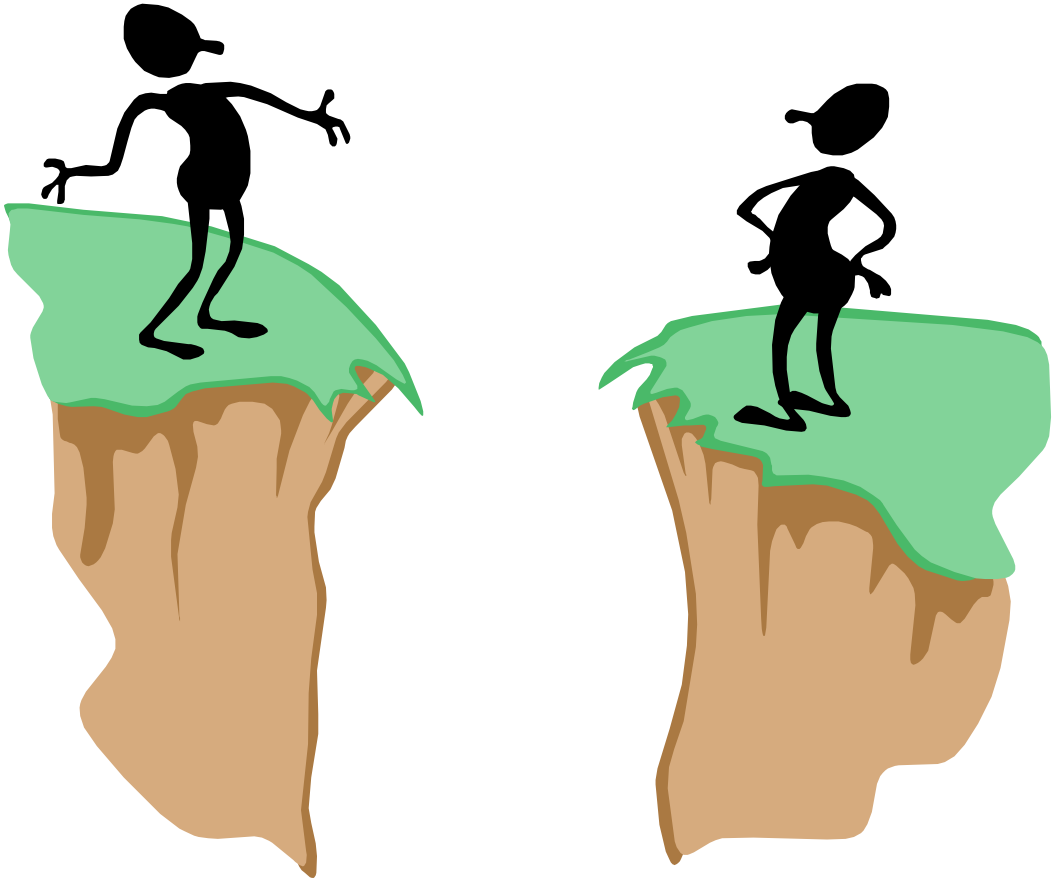

HTTP://WWW-DSSZ.INFORMATIK.TU-COTTBUS.DE/BME/PETRINETS2009